CITY OF RICHMOND
RECORD OF CHANGES
STANDARD CONSTRUCTION DETAILS

DATE OF CHANGE	PAGE NUMBER	SUMMARY OF CHANGE MADE	AUTHORIZATION
3/22/2019	R-1-19	Various Grammatical and Spelling	H Christian
3/22/2019	R-2-19, #4 Detail	Revized Nozzle Sizes	H Christian
3/22/2019	R-2-19, #5 Detail	Replaced	H Christian
3/22/2019	R-2-19, #6 Detail	Clarified Retrained Joint Area/Distance	H Christian
3/22/2019	R-2-19, #7 Detail	Revised spacing	H Christian
3/22/2019	R-2-19, #10 Detail	Replaced	H Christian
3/22/2019	R-3-19, #1 Detail	Replaced	H Christian
3/22/2019	R-3-19, #4 Detail	Added Note No. 8 and Meter Box Sizes	H Christian
3/22/2019	R-3-19, #5 Detail	Eliminated	H Christian
3/22/2019	R-3-19, #6 Detail	Replaced and moved to #5 Detail	H Christian
3/22/2019	R-4-19, #4 Detail	Replaced	H Christian
3/22/2019	R-4-19, #7 Detail	Revised Cover to Concrete Box	H Christian
3/22/2019	R-4-19, #9 Detail	Added	H Christian
3/22/2019	R-4-19, #10 Detail	Added	H Christian
3/22/2019	R-5-19, #1 Detail	Moved to #2 Detail	H Christian
3/22/2019	R-5-19, #2 Detail	Moved to #1 Detail and Added Note Nos. 17 and 18	H Christian
3/22/2019	R-5-19, #3 Detail	Eliminated	H Christian
3/22/2019	R-5-19, #4 Detail	Moved to #3 Detail	H Christian
3/22/2019	R-7-19, #2 Detail	Removed Brick above Pipe and Replaced with Concrete	H Christian
3/22/2019	R-12-19	Updated to latest TxDOT Details	H Christian

March 2019

City of Richmond
Implementation of Standard Sheets

For use on Subdivision and Site Development Projects within the City and ETJ:

1. Include Standard Sheets, without modification, for each applicable type of construction.

2. Retain the Standard Sheet numbers. (e.g., R-1…)

3. Include the Standard Sheets in the Plan Sheet List on the Project Cover Sheet.

4. The project engineer may place an "X" over the individual details that do not apply to a particular project

5. The project engineer may provide supplemental details that are not provided in the Standard Sheets

6. Conflicts between the Construction Plans and the City Standards shall be constructed in accordance with the adopted City Standards or the more stringent requirement, as determined by the City Engineer.

CITY OF RICHMOND
DEPARTMENT OF PUBLIC WORKS
STANDARD CONSTRUCTION DETAILS

CIP NO._____ PROJECT NO. _____

VICINITY MAP

MAYOR
EVALYN W. MOORE

COMMISSIONERS
BARRY BEARD
CARL DROZD
TERRY GAUL
JOSH LOCKHART

CITY MANAGER
TERRI VELA

INDEX OF DRAWINGS	SHEET NO.
COVER SHEET	1
GENERAL CONSTRUCTION NOTES ~ R-1-19	
WATER 1 – CONSTRUCTION DETAILS ~ R-2-19	
WATER 2 – CONSTRUCTION DETAILS ~ R-3-19	
SANITARY 1 – CONSTRUCTION DETAILS ~ R-4-19	
SANITARY 2 – CONSTRUCTION DETAILS ~ R-5-19	
STORM SEWER 1 – CONSTRUCTION DETAILS ~ R-6-19	
STORM SEWER 2 – CONSTRUCTION DETAILS ~ R-7-19	
STORM SEWER 3 – CONSTRUCTION DETAILS ~ R-8-9	
PAVING 1 – CONSTRUCTION DETAILS ~ R-9-19	
PAVING 2 – CONSTRUCTION DETAILS ~ R-10-19	
PAVING 3 – CONSTRUCTION DETAILS ~ R-11-19	
PAVING 4 – CONSTRUCTION DETAILS ~ R-12-19	

NOTE: DRAWING INDEX CAN BE ON FOLLOWING PAGE IF NEEDED

ARCH.
OR
PE SEAL

NAME OF ARCHITECTURE
OR ENGINEERING FIRM

APPROVED
CITY OF RICHMOND

DIRECTOR OF PUBLIC WORKS — DATE
HOWARD CHRISTIAN

CITY ENGINEER — DATE
KALUZA, INC.

SHEET 1

File Name:W:\Details\Richmond\2019 COR STANDARD\R – COVER 2019.dwg
Plot date:Tuesday, March 19, 2019 9:47:47 AM
Save date:Tuesday, March 19, 2019 9:29:56 AM

GENERAL NOTES

G-1. THE CONTRACTOR SHALL NOTIFY CITY OF RICHMOND (REFERRED TO AS THE "CITY") DIRECTOR OF PUBLIC WORKS AT LEAST 48 HOURS PRIOR TO COMMENCEMENT OF WORK AT (281) 342-0559. CONTRACTOR SHALL ATTEND A PRECONSTRUCTION MEETING WITH CITY AND THE PROJECT ENGINEER PRIOR TO INITIATING CONSTRUCTION. PRECONSTRUCTION MEETINGS SHALL BE HELD AT 600 MORTON STREET OR AT A LOCATION APPROVED BY THE DIRECTOR OF PUBLIC WORKS.

G-2. ALL PUBLIC INFRASTRUCTURE SHALL BE INSPECTED BY PUBLIC WORKS INSPECTOR(S) OR AUTHORIZED AGENTS(S). A FOLLOW-UP INSPECTION OF ALL PUBLIC INFRASTRUCTURE SHALL BE SCHEDULED WITHIN 60 DAYS OF THE INITIAL INSPECTION. A COMPLETE RE-INSPECTION WITH A NEW PUNCH LIST MAY BE REQUIRED AFTER THE 60 DAY PERIOD. THE CITY CONSTRUCTION INSPECTOR TO BE NOTIFIED A MINIMUM OF 24 HOURS, ON ALL PAVEMENT POURS, WATER, STORM AND SANITARY TESTING. TESTING WILL NOT BE DONE ON A SATURDAY, UNLESS PRIOR APPROVAL IS PROVIDED. COMPLETED WORK SHALL NOT BE BACKFILLED WITHOUT APPROVAL OF THE CITY.

G-3. CONTRACTOR MUST OBTAIN ALL PERMITS AND SUPPLY ALL BONDS REQUIRED BY THE CITY, PRIOR TO BEGINNING CONSTRUCTION. ALL REQUIRED PERMITS MUST BE LISTED ON SITE, PLACED IN A WATERPROOF ENCASEMENT.

G-4. UPON COMPLETION OF A PROJECT, THE CONTRACTOR AND/OR PROJECT ENGINEER SHALL PROVIDE THE DIRECTOR OF PUBLIC WORKS AND CITY ENGINEER DETAILED, "RECORD DRAWINGS" IN REPRODUCTIVE AND ELECTRONIC FORMAT.

G-5. THE CONTRACTOR SHALL FURNISH ALL MATERIALS, EQUIPMENT AND LABOR FOR EXCAVATION, INSTALLATION AND BACKFILLING OF WATER, SANITARY AND STORM SEWER LINES AND RELATED APPURTENANCES AS SHOWN ON THE PLANS AND/OR DESCRIBED IN THE SPECIFICATIONS.

G-6. ALL MATERIALS AND WORKMANSHIP SHALL CONFORM TO THE TEXAS DEPARTMENT OF TRANSPORTATION STANDARD SPECIFICATIONS (2004) AND REVISIONS THERETO.

G-7. ALL WORK PERFORMED SHALL COMPLY WITH CURRENT NATIONAL SPECIFICATIONS AND STANDARD PRACTICES, APPROVED PROJECT PLANS AND SPECIFICATIONS AND ALL APPLICABLE CITY STANDARDS, CODES AND ORDINANCES.

G-8. ALL CONSTRUCTION TRAFFIC CONTROL IN THE PROJECT AREA SHALL MEET THE REQUIREMENTS OF THE TEXAS MANUAL OF UNIFORM TRAFFIC CONTROL DEVICES AND SHALL BE APPROVED BY THE CITY FOR ALL PROJECTS WITHIN THE CITY LIMITS.

G-9. CONTRACTOR SHALL NOTIFY ALL UTILITY COMPANIES IN THE AREA PRIOR TO COMMENCING WORK IN ANY RIGHT-OF-WAY OR EXISTING EASEMENT. A VERIFICATION NUMBER FROM THE ONE-CALL UTILITY COORDINATING COMMITTEE IS REQUIRED.

G-10. THE CONTRACTOR SHALL BE RESPONSIBLE FOR VERIFYING THE LOCATIONS OF ALL EXISTING UTILITIES PRIOR TO EXCAVATION AND UNCOVER EXISTING UTILITIES AT ALL "POINTS OF CROSSING" TO DETERMINE IF CONFLICTS EXIST PRIOR TO COMMENCING ANY CONSTRUCTION. NOTIFY THE PROJECT ENGINEER, CITY ENGINEER AND DIRECTOR OF PUBLIC WORKS IMMEDIATELY OF ANY CONFLICT.

G-11. IT SHALL BE THE CONTRACTOR'S RESPONSIBILITY TO LOCATE SUCH UNDERGROUND FEATURES SUFFICIENTLY IN ADVANCE OF OPERATIONS TO PRECLUDE DAMAGE IN THE EVENT THAT UNDERGROUND FACILITIES NOT SHOWN ON THE DRAWINGS ARE ENCOUNTERED.

G-12. IN THE EVENT OF DAMAGE TO UNDERGROUND FACILITIES, WHETHER OR NOT IT IS SHOWN ON THE DRAWINGS, THE CONTRACTOR SHALL MAKE THE NECESSARY REPAIRS TO REPLACE THE FACILITY BACK IN SERVICE. ALL SUCH REPAIRS SHALL CONFORM TO THE REQUIREMENTS OF THE OWNER OF THE FACILITY.

G-13. THE CONTRACTOR SHALL PROVIDE SHEETING, SHORING AND BRACING NECESSARY TO PROTECT WORKMEN AND EXISTING UTILITIES DURING ALL PHASES OF CONSTRUCTION AS MAY BE REQUIRED BY O.S.H.A, FEDERAL, STATE AND LOCAL LAWS, CODES AND ORDINANCES.

G-14. CONTRACTOR SHALL COVER OPEN EXCAVATIONS WITH ANCHORED STEEL PLATES DURING NON-WORKING HOURS ALONG EXISTING ROADWAYS AND WITHIN TRAFFIC AREAS.

G-15. ALL TESTING FOR THIS PROJECT SHALL CONFORM TO THE CITY REQUIREMENTS. SHOULD ANY TEST RESULTS NOT MEET THE TESTING REQUIREMENTS, IT SHALL BE THE CONTRACTOR'S RESPONSIBILITY TO REMOVE OR REPLACE SUCH MATERIALS AND INSTALLATIONS, SO THAT THE TESTING REQUIREMENTS ARE MET.

G-16. THE LOADING, UNLOADING AND HANDLING OF ALL PIPE, VALVES, HYDRANTS, FITTINGS, MANHOLES AND OTHER MATERIALS SHALL BE IN ACCORDANCE WITH THE MANUFACTURER'S RECOMMENDED PRACTICES AND SHALL BE PERFORMED WITH CARE TO AVOID ANY DAMAGE TO THE MATERIALS. THE CONTRACTOR SHALL LOCATE AND PROVIDE THE NECESSARY STORAGE AREAS FOR MATERIALS AND EQUIPMENT.

G-17. THE CONTRACTOR SHALL BE RESPONSIBLE FOR SAFEGUARDING AND PROTECTING ALL MATERIAL AND EQUIPMENT STORED ON THE JOB SITE. THE CONTRACTOR SHALL BE RESPONSIBLE FOR THE STORAGE OF MATERIALS IN A SAFE AND WORKMANLIKE MANNER TO PREVENT INJURIES, DURING AND AFTER WORKING HOURS, UNTIL PROJECT COMPLETION.

G-18. THE CONTRACTOR SHALL NOT UNLOAD ANY TRACK-TYPE CONSTRUCTION MACHINERY ON ANY EXISTING PAVEMENT OR CROSS OVER ANY EXISTING PAVEMENT OR CURB DURING ANY PROJECT.

G-19. IT IS THE CONTRACTOR'S RESPONSIBILITY TO SUPERVISE AND COORDINATE ALL WORK TO INSURE THE PROPER EXECUTION. ALL WORK IS TO BE ACCOMPLISHED IN A NEAT, WORKMANLIKE MANNER, AND ALL EXCESS MATERIALS, TRASH AND DEBRIS, ETC., SHALL BE REMOVED FROM THE JOB BY THE CONTRACTOR, AT HIS EXPENSE.

G-20. CONTRACTOR SHALL REMOVE DIRT AND/OR DEBRIS DEPOSITED ON EXISTING PAVEMENT DUE TO HIS CONSTRUCTION ACTIVITY ON A DAILY BASIS. ALL EQUIPMENT AND CONSTRUCTION DEBRIS SHALL BE REMOVED FROM THE SITE AT THE END OF THE PROJECT.

G-21. EXISTING ROADS, RIGHT-OF-WAYS, EASEMENTS AND PROPERTY DISTURBED DURING CONSTRUCTION SHALL BE RESTORED AS GOOD OR BETTER THAN THE CONDITION PRIOR TO STARTING THE WORK.

G-22. UNLESS OTHERWISE REQUIRED, ALL DISTURBED AREAS SHALL BE SEEDED WITH HYDROMULCH SEEDING AND PROVIDE WATERING UNTIL VEGETATION IS ESTABLISHED.

G-23. ALL EXCESS AND/OR UNSUITABLE SOIL, AND DEBRIS AND/OR WASTE MATERIALS SHALL BE REMOVED FROM THE SITE AND DISPOSED OF PROPERLY.

G-24. ADJUST MANHOLES, INLETS, FLUSHING VALVES AND WATER VALVE BOXES TO MATCH FINAL GRADE IN ACCORDANCE WITH THE REQUIREMENTS OF THE CITY.

G-25. UTILITY SERVICE LINES

1) ALL UTILITY SERVICE LINES ARE NOT SHOWN ON THE DRAWINGS. CONTRACTORS SHALL ANTICIPATE THAT SUCH SERVICE LINES EXIST AND REPAIR THEM IF DAMAGED DURING CONSTRUCTION. IT IS ALSO THE CONTRACTOR'S RESPONSIBILITY TO MAKE ARRANGEMENTS WITH THE OWNERS OF SUCH UTILITIES PRIOR TO WORKING IN THE AREA TO CONFIRM THEIR EXACT LOCATIONS AND/OR DEPTHS, AND TO DETERMINE WHETHER ANY ADDITIONAL UTILITIES OTHER THAN THOSE SHOWN ON THESE PLANS MAY BE PRESENT. THE CONTRACTOR SHALL DETERMINE IF ANY OF THESE UTILITIES ARE CLEAR, AND SHALL PRESERVE AND PROTECT ALL OF THESE UTILITIES SHOWN OR FOUND. IF CONFLICTS ARISE REGARDING PUBLIC UTILITIES, THE CONTRACTOR SHOULD IMMEDIATELY NOTIFY THE PROJECT ENGINEER.

2) UTILITY RELOCATIONS REQUIRED BY CONSTRUCTION SHALL BE PERFORMED BY THE APPROPRIATE UTILITY COMPANY. ANY RELOCATIONS OR TEMPORARY BRACING NOT DEEMED NECESSARY BY THE ENGINEER, BUT DESIRED FOR CONVENIENCE BY THE CONTRACTOR, SHALL BE PERFORMED BY THE APPROPRIATE UTILITY COMPANY AT THE CONTRACTOR'S EXPENSE.

3) TEXAS ONE CALL	1-800-245-4545	6) AT&T	281-341-4312
4) CENTERPOINT ENERGY-GAS	281-342-8881	7) COMCAST	713-462-1900
5) CENTERPOINT ENERGY-ELECTRIC	281-341-4930	8) CITY OF RICHMOND	281-342-0559

G-26. AT&T TELEPHONE

1) THE CONTRACTOR SHALL DETERMINE THE ACTUAL LOCATION OF UTILITIES BY CALLING TEXAS ONE-CALL SYSTEM AT LEAST 72 HOURS BEFORE COMMENCING WORK. CONTRACTOR AGREES TO BE FULLY RESPONSIBLE FOR ANY AND ALL DAMAGES WHICH MIGHT BE OCCASIONED BY THE CONTRACTOR'S FAILURE TO LOCATE AND PRESERVE THE UNDERGROUND UTILITIES.

2) CONTRACTOR SHALL HAND DIG WITHIN ONE (1) FOOT OF AT&T UNDERGROUND CONDUIT OR CABLE SYSTEMS.

G-27. CENTERPOINT ENERGY (ELECTRIC)

1. OVERHEAD LINES EXIST ON THE PROPERTY AND APPROXIMATE LOCATIONS ARE SHOWN ON THE DRAWINGS. CONTRACTOR SHALL VERIFY THEIR LOCATION PRIOR TO BEGINNING ANY CONSTRUCTION. TEXAS LAW, SECTION 752, HEALTH AND SAFETY CODE, FORBIDS ALL ACTIVITIES IN WHICH PERSONS OR THINGS MAY COME WITHIN SIX (6) FEET OF LIVE OVERHEAD HIGH VOLTAGE LINES. CONTRACTOR IS LEGALLY RESPONSIBLE FOR SAFETY OF CONSTRUCTION WORKERS UNDER THIS LAW TO ARRANGE FOR LINES TO BE TURNED OFF OR MOVED AND LOCATE EXISTING UNDERGROUND UTILITIES, CALL CENTERPOINT ENERGY AT LEAST 72 HOURS BEFORE COMMENCING WORK.

2. CONSTRUCTION THAT WILL REQUIRE EXCAVATION CLOSER THAN THREE (3) FEET TO CENTERPOINT FACILITIES SHALL BE BORED AND JACKED WITH THE WRITTEN APPROVAL FROM CENTERPOINT.

3. CONTRACTOR SHALL HAND DIG WITHIN ONE (1) FOOT OF CENTERPOINT ENERGY UNDERGROUND CONDUIT OR AS OTHERWISE REQUIRED BY CENTERPOINT.

G-28. CENTERPOINT ENERGY (GAS)

CAUTION: UNDERGROUND GAS FACILITIES
LOCATIONS OF CENTERPOINT ENERGY MAIN LINES (TO INCLUDE CENTERPOINT ENERGY, INTRASTATE PIPELINE, LLC. WHERE APPLICABLE) ARE SHOWN IN AN APPROXIMATE LOCATION ONLY. SERVICE LINES ARE USUALLY NOT SHOWN. OUR SIGNATURE ON THESE PLANS ONLY INDICATES THAT OUR FACILITIES ARE SHOWN IN APPROXIMATE LOCATION. IT DOES NOT IMPLY THAT A CONFLICT ANALYSIS HAS BEEN MADE. THE CONTRACTOR SHALL CONTACT THE UTILITY COORDINATING COMMITTEE AT (713) 223-4567, 1-800-669-8344 OR 811 A MINIMUM OF 48 HOURS PRIOR TO CONSTRUCTION TO HAVE MAIN AND SERVICE LINES FIELD LOCATED.

WHEN CENTERPOINT ENERGY PIPE LINE MARKINGS ARE NOT VISIBLE, CALL (713) 945-8036 OR (713) 945-8037 (7:00 A.M. TO 4:30 P.M.) FOR STATUS OF LINE LOCATION REQUEST BEFORE EXCAVATION BEGINS.

WHEN EXCAVATING WITHIN EIGHTEEN INCHES (18") OF THE INDICATED LOCATION OF CENTERPOINT ENERGY FACILITIES, ALL EXCAVATION MUST BE ACCOMPLISHED USING NON-MECHANIZED EXCAVATION PROCEDURES

WHEN CENTERPOINT ENERGY FACILITIES ARE EXPOSED, SUFFICIENT SUPPORT MUST BE PROVIDED TO THE FACILITIES TO PREVENT EXCESSIVE STRESS ON THE PIPING.
FOR EMERGENCIES REGARDING GAS LINES CALL (713) 659-3552 OR (713) 207-4200

THE CONTRACTOR IS FULLY RESPONSIBLE FOR ANY DAMAGES CAUSED BY HIS FAILURE TO EXACTLY LOCATE AND PRESERVE THESE UNDERGROUND FACILITIES.

ACTIVITIES ON OR ACROSS CENTERPOINT ENERGY FEE OR EASEMENT PROPERTY NO APPROVAL TO USE, CROSS OR OCCUPY CENTERPOINT FEE OR EASEMENT PROPERTY IS GIVEN. IF YOU NEED TO USE CENTERPOINT PROPERTY, PLEASE CONTACT THEIR SURVEYING & RIGHT OF WAY DIVISION AT (713) 207-6248 OR (713) 207-5769

G-29. COMCAST - THE CONTRACTOR SHALL NOTIFY COMCAST AT LEAST 72 HOURS BEFORE COMMENCING WORK TO LOCATE EXISTING UNDERGROUND CABLE.

G-30. ALL PIPE AND REINFORCEMENT STEEL SHALL BE KEPT FREE OF DIRT AND DEBRIS. ANY DAMAGE TO THE COATINGS OF THE VARIOUS MATERIALS MUST BE REPAIRED OR REPLACED BY THE CONTRACTOR WITH APPROVAL BY THE CITY.

G-31. CONTRACTOR SHALL BE RESPONSIBLE FOR MAINTAINING ADEQUATE AND POSITIVE DRAINAGE AT ALL TIMES DURING CONSTRUCTION.

G-32. NO CONNECTIONS SHALL BE MADE TO THE EXISTING WATER LINES OR SANITARY SEWERS UNTIL ALL PROPOSED LINES HAVE BEEN THOROUGHLY CLEANED, TESTED AND APPROVED BY THE CITY.

G-33. CONTRACTOR SHALL VERIFY PUBLIC INFRASTRUCTURE ALIGNMENT, CENTERLINE CURVE DATA AND STATIONING WITH APPROVED SUBDIVISION PLAT AND APPROVED PLANS.

G-34. ALL BACKFILL (INCLUDING CEMENT STABILIZED SAND) SHALL BE PLACED IN LIFTS THAT DO NOT EXCEED 8" (LOOSE), SHALL BE COMPACTED TO 95% STANDARD PROCTOR DENSITY AND BE TESTED BY A CERTIFIED TESTING LABORATORY.

G-35. ALL TRENCH BACKFILL SHALL BE TESTED AT A MINIMUM RATE OF ONE DENSITY TEST PER ONE LIFTS OF TRENCH BACKFILL PER 300 FEET OF TRENCH. TESTS SHALL BE TAKEN AT RANDOM LOCATION SELECTED BY THE LAB OR AS AS OTHERWISE REQUESTED BY THE CITY.

G-36. THIS CONSTRUCTION PROJECT THAT REQUIRES THE SWPPP, IT MUST BE INSTALLED BEFORE THE WORK BEGINS. IT MUST BE MAINTAINED THROUGHOUT THE DURATION OF THE PROJECT.

G-37. CONTRACTOR SHALL CONTACT CITY PUBLIC WORKS DEPARTMENT IMMEDIATELY IF WET SAND CONDITIONS ARE ENCOUNTERED. NO BEDDING SHALL BE INSTALLED IN WET CONDITIONS. WHEN WELL POINTING OR IN WET SAND CONDITIONS, MAINTAIN GROUND WATER 1' (FT.) BELOW BOTTOM OF TRENCH FOR A MINIMUM OF 24 HOURS AFTER BEDDING AND BACKFILL IS IN PLACE.

G-38. IN THE EVENT OF CONFLICT BETWEEN THE CITY OF RICHMOND DETAIL SPECIFICATIONS, CONSTRUCTION NOTES, OR CITY OF RICHMOND PUBLIC INFRASTRUCTURE DESIGN MANUAL, OR THE MORE STRINGENT REQUIREMENTS WILL GOVERN.

WATER DISTRIBUTION NOTES

W-1. EXCEPT AS OTHERWISE REQUIRED, WATER MAINS FOUR INCHES (4") THROUGH TWELVE INCHES (12") SHALL BE AWWA C-900, CLASS 150, DR 18.
WATER MAINS LESS THAN 4 INCHES (4") DIAMETER SHALL BE PVC, ASTM D-2241, SDR-21 (PR-200), WITH RUBBER GASKET JOINTS OR APPROVED EQUAL. ALL POTABLE WATER PIPE USED IN THE PROJECT MUST MEET THE REQUIREMENTS OF AMERICAN NATIONAL STANDARDS INSTITUTE/NATIONAL SANITATION FOUNDATION STANDARD 61 (ANSI/NSF61). PIPE SHALL BE CERTIFIED TO CONFORM TO ANSI/NSF-61 AND SHALL BE MARKED "NSF-PW".

W-2. ALTERNATIVE WATER MAIN PIPE MATERIAL (WITH APPROVAL OF THE CITY):
A) STEEL: AWWA C200, 150 PSI FOR LINES 4-INCHES TO 12-INCHES, 235 PSI FOR LINES GREATER THAN 12-INCHES. ALL PIPE COATINGS SHALL BE IN ACCORDANCE WITH AWWA C210. ALL NUTS AND BOLTS SHALL BE EPOXY COATED.

B) DUCTILE IRON: AWWA C151 (ANSI A21.51) FOR LINES 4-INCHES TO 54-INCHES. PIPE SHALL BE LINED WITH POLYWRAP IN ACCORDANCE WITH AWWA C104 (ANSI A21.4).

W-3. INSTALLATION OF WATER MAINS SHALL BE IN ACCORDANCE WITH CURRENT AWWA APPROVED METHODS, STANDARDS AND MATERIALS, TEXAS COMMISSION ON ENVIRONMENTAL QUALITY (T.C.E.Q.) REGULATIONS AND CITY STANDARDS, CODES AND ORDINANCES.

W-4. ALL WATER MAINS SHALL HAVE A MINIMUM 3.5 FEET AND A MAXIMUM 5 FEET OF COVER WHEN CONSTRUCTED IN STREET RIGHTS-OF-WAY OR EASEMENTS, UNLESS APPROVED BY THE CITY.

W-5. FIRE HYDRANTS SHALL BE SET BEHIND BACK OF CURB AT APPROVED LOCATIONS. CENTER LINE OF FIRE HYDRANTS SHALL BE THREE (3) FEET FROM BACK OF CURB OF THE STREET UNLESS OTHERWISE REQUIRED IN THE PLANS. FIRE HYDRANTS SHALL BE INSTALLED A MINIMUM OF TEN (10) FEET FROM ALL SANITARY SEWERS AND APPURTENANCES. FIRE HYDRANTS SHALL BE LOCATED OPPOSITE PROPERTY LINES OR RIGHT-OF-WAY LINE EXTENSIONS, UNLESS OTHERWISE APPROVED BY THE CITY.

W-6. GATE VALVES, FIRE HYDRANTS AND BLOWOFFS SHALL BE COUNTER-CLOCKWISE OPENING.

W-7. ALL FITTINGS, VALVES AND FIRE HYDRANTS SHALL BE CAST IRON MECHANICAL JOINT TYPE UNLESS APPROVED IN WRITING BY THE CITY. ALL MECHANICAL JOINTS SHALL BE INSTALLED WITH MECHANICAL RESTRAINED JOINTS (EBAA IRON, INC., SERIES 2000PV OR EQUAL). NIPPLES FROM FITTING TO FITTING AT GATE VALVES SHALL BE 18" IN LENGTH.

W-8. A MINIMUM HORIZONTAL CLEARANCE OF NINE FEET (9') BETWEEN WATER MAINS AND SANITARY SEWER LINES SHALL BE MAINTAINED BY THE CONTRACTOR, EXCEPT AS APPROVED BY THE CITY.

W-9. THE CONTRACTOR SHALL PROVIDE FOR A MINIMUM OF SIX INCHES (6") CLEARANCE AT STORM SEWER AND WATER LINE CROSSINGS AND TWENTY-FOUR INCHES (24") MINIMUM CLEARANCE AT SANITARY SEWER AND WATER LINE CROSSINGS. WATER LINES SHALL BE LOCATED AT A HIGHER ELEVATION THAN THE SEWER WHEREVER POSSIBLE. WHEN NOT POSSIBLE, T.C.E.Q., "RULES AND REGULATIONS FOR PUBLIC WATER SYSTEMS", ARTICLE 290.44 WILL TAKE PRECEDENCE. IF A CONFLICT EXISTS, THE CONTRACTOR SHALL ADVISE THE DIRECTOR OF PUBLIC WORKS AND WATER SUPERINTENDENT IMMEDIATELY AND SHALL NOT CONTINUE FURTHER CONSTRUCTION WITHOUT CITY APPROVAL.

W-10. ABANDONMENT OF EXISTING WATER LINES SHALL BE PERFORMED BY THE CONTRACTOR IN ACCORDANCE WITH APPROVED PLANS OR WHEN APPROVAL FROM THE CITY PUBLIC WORKS DIRECTOR OR WATER SUPERINTENDENT IS OBTAINED IN WRITING.

W-11. TAPPING SLEEVE & VALVES ON THE EXISTING CITY WATER SYSTEM WILL BE INSTALLED BY A CITY APPROVED TAPPING CONTRACTOR.

W-12. NO CONNECTION SHALL BE MADE TO ANY EXISTING WATER LINES UNTIL THE NEW WATER LINES HAVE BEEN THOROUGHLY STERILIZED, CLEANED AND TESTED AND FINAL APPROVAL FROM THE CITY'S AUTHORIZED AGENT HAS BEEN OBTAINED IN WRITING.

W-13. ALL VALVES AND HYDRANTS SHALL BE STORED SO THAT THEY ARE PROTECTED FROM FREEZING.

W-14. ALL PRESSURE PIPE INSTALLATIONS SHALL BE TESTED FOR LEAKAGE. TEST PRESSURE SHALL BE 1.5 TIMES THE MAXIMUM DESIGN PRESSURE OR 150 PSIG, WHICHEVER IS GREATER. THE TEST SHALL HAVE A MINIMUM DURATION OF FOUR HOURS AND SHALL BE OBSERVED BY THE AUTHORIZED REPRESENTATIVE OF THE CITY PUBLIC WORKS DEPARTMENT.

W-15. STERILIZATION OF NEW WATER LINES SHALL BE DONE IN ACCORDANCE WITH AWWA C-651, LATEST EDITION. A MINIMUM OF ONE SAMPLE PER 1000 FEET OF WATER MAIN OR ONE SAMPLE PER SEPARATION SECTION OF WATER MAIN SHALL BE COLLECTED. IF THE SAMPLES FAIL TO MEET THE T.C.E.Q. DRINKING WATER STANDARD REQUIREMENTS, THE FLUSHING AND TESTING PROCESS SHALL BE REPEATED.

W-16. WATER LINES SHALL HAVE SAND EMBEDMENT TO TWELVE (12) INCHES ABOVE THE TOP OF PIPE.

W-17. WATER LINE TRENCHES UNDER PAVEMENT OR WITHIN THREE (3) FEET FROM EDGE OF PAVEMENT TO BE BACKFILLED WITH CEMENT STABILIZED SAND (2 SACKS OF CEMENT PER TON OF SAND) FROM THE TOP OF THE EMBEDMENT TO THE BASE OF PROPOSED BASE OF PROPOSED PAVING SUBGRADE LESS 6 INCHES.

W-18. ALL WATER LINE CONSTRUCTION CROSSING EXISTING ASPHALT AND/OR CONCRETE STREETS SHALL BE BORED AND JACKED, UNLESS OTHERWISE APPROVED BY THE PROJECT ENGINEER AND THE CITY.

W-19. TRENCH SAFETY SYSTEM IS REQUIRED FOR ALL WATER MAIN CONSTRUCTION.

W-20. CONCRETE THRUST BLOCKING IS REQUIRED FOR ALL VALVES, FIRE HYDRANTS AND FITTINGS.

W-21. A TRAC-HOE IS NOT A COMPACTOR. USE PROPER COMPACTING METHODS, SUCH AS, SHEEPSFOOT, JUMPING JACK, PLATE, ETC..

SANITARY SEWER CONSTRUCTION NOTES

S-1. SANITARY SEWERS SHALL BE CONSTRUCTED ACCORDING TO THESE PLANS AND SPECIFICATIONS AND THE CITY AND THE TEXAS COMMISSION ON ENVIRONMENTAL QUALITY (T.C.E.Q.) RULES AND REGULATIONS.

S-2. ALL MANHOLES SHALL BE PRECAST IN ACCORDANCE WITH DETAILS INCLUDING THE INTERIOR COATING. BRICK MANHOLES ARE NOT ALLOWED. ALL SANITARY MANHOLES SHALL BE INSTALLED WITH INFLOW PROTECTORS.

S-3. ALLOWABLE SANITARY SEWER PIPE MATERIAL:

A) GRAVITY LINES

1. POLYVINYL CHLORIDE (PVC), PIPE AND FITTINGS MEETING THE REQUIREMENTS OF ASTM D2241 (SDR 26; PR160), ASTM D1784, ASTM D3212 AND ASTM F477. FOR DEPTH LESS THAN 4 FEET AND GREATER THAN 20 FEET, INSTALL ASTM D2241 (SDR21, PR200).

2. DUCTILE IRON (D.I.P.), AWWA C-151, AWWA C-111, STANDARD CLASS 150, WITH BELL AND SPIGOT PUSH-ON JOINTS, ALL PIPE SHALL HAVE AN INTERIOR POLYETHYLENE COATING OF 40-MILS AND AN EXTERIOR POLYETHYLENE WRAP OF 8-MILS.

B) FORCE MAINS

1. PVC, 4-INCH TO 12-INCH, AWWA C900, DR18, CLASS 150, ASTM D3139, ASTM F477. (GREEN COLOR)

S-4. ALL D.I.P. SANITARY SEWER PIPES SHALL BE LINED WITH POLYWRAP AND INSTALLED WITH CATHODIC PROTECTION.

S-5. THE CONTRACTOR SHALL NOTIFY THE CITY PUBLIC WORKS DEPARTMENT AT LEAST 24 HOURS PRIOR TO PRESSURE AND DEFLECTION TESTS ON ALL GRAVITY SANITARY SEWERS. ALL TESTS SHALL BE MONITORED BY AN AUTHORIZED AGENT OF THE CITY.

S-6. ALL GRAVITY SANITARY SEWER PIPE SHALL BE LOW PRESSURE AIR TESTED AND MANHOLES VACUUM TESTED IN ACCORDANCE WITH T.C.E.Q. REQUIREMENTS. FORCE MAINS SHALL BE HYDROSTATIC TESTED AT A MINIMUM OF 150 PSI.

S-7. DEFLECTION TESTS SHALL BE PERFORMED ON ALL FLEXIBLE AND SEMI-RIGID PIPE. THE CITY MAY REQUIRE SERVICE LEADS TO BE RANDOMLY TESTED. DEFLECTION TESTS SHALL BE CONDUCTED AFTER THE FINAL BACKFILL HAS BEEN IN PLACE AT LEAST 30 DAYS. NO PIPE SHALL EXCEED A DEFLECTION OF 5%. THE TEST SHALL BE CONDUCTED USING A MANDREL HAVING AN OUTSIDE DIAMETER EQUAL TO 95% OF THE AVERAGE INSIDE DIAMETER OF THE PIPE. THE MANDREL SHALL HAVE A MINIMUM OF 9 RUNNERS WITH THE CONTACT LENGTH OF EACH RUNNER EQUAL TO OR GREATER THAN THE PIPE'S NOMINAL DIAMETER. THE TEST SHALL BE PERFORMED WITHOUT MECHANICAL PULLING DEVICES.

S-8. SANITARY SEWER MANHOLE RIMS, EXCEPT IN PAVED AREAS, SHALL BE SET 4-INCHES ABOVE FINISHED GRADE WITHIN STREET RIGHT-OF-WAY, AND 6-INCHES ABOVE FINISHED LOT GRADES WITHIN EASEMENTS. CLEAN FILL MAY BE PLACED ADJOINING THE MANHOLE AND GRADED AWAY FROM THE RIM FOR SURFACE WATER DRAINAGE.

S-9. SANITARY MANHOLES BELOW THE 100-YEAR FLOOD PLAIN (OR WHERE OTHERWISE REQUIRED) SHALL BE WATERPROOFED USING A NEOPRENE GASKET. ONLY STAINLESS STEEL SCREWS OR NUTS & BOLTS CAN BE USED TO HOLD DOWN THE COVER. A VENT PIPE EXTENDING ONE FOOT ABOVE THE FLOODPLAIN ELEVATION SHALL BE PROVIDED, UNLESS OTHERWISE APPROVED.

S-10. SANITARY LINES AND MANHOLES PARALLEL TO WATER LINES SHALL BE INSTALLED WITH AT LEAST A 9-FOOT HORIZONTAL SEPARATION (OUTSIDE TO OUTSIDE). SANITARY SEWERS INSTALLED CROSSING UNDER WATER MAIN SHALL COMPLY WITH T.C.E.Q. REQUIREMENTS.

S-11. ALL SANITARY SEWERS SHALL BE CONSTRUCTED ON A STRAIGHT ALIGNMENT AND ON A UNIFORM GRADE. GRAVITY SEWERS SHALL BE CONSTRUCTED WITH THE PIPE BELL FACING UPSTREAM. ALL 6-INCH SANITARY SERVICE LEADS SHALL BE LAID WITH A MINIMUM GRADE OF 0.70%

S-12. ALL SEWER LEADS AND STUBOUTS SHALL BE MARKED IN ACCORDANCE WITH THE DETAILS. THE CONTRACTOR SHALL BE RESPONSIBLE FOR MAINTAINING THE MARKERS IN GOOD AND PLUMB CONDITION WITH A VERTICAL ALIGNMENT. IF DAMAGED, THE CONTRACTOR SHALL REPLACE THE MARKER.

S-13. ALL SEWER LINES (INCLUDING SERVICE LEADS) ENTERING A MANHOLE AT AN ELEVATION GREATER THAN 24-INCHES ABOVE THE MANHOLE INVERT MUST BE CONSTRUCTED WITH AN EXTERIOR DROP PIPE IN ACCORDANCE WITH THE DETAILS.

S-14. STEPS IN MANHOLES ARE PROHIBITED.

S-15. CONTRACTOR SHALL PROVIDE ADEQUATE CONCRETE THRUST BLOCKING AT ALL FORCE MAIN BENDS.

S-16. AT ALL LOTS WHERE TOP OF PIPE IS GREATER THAN 8-FEET BELOW FINISHED GRADE, PROVIDE A 6-INCH SANITARY SEWER STACK OR RISER. STACKS AND RISERS SHALL BE EXTENDED TO WITHIN 6 FEET OF FINISHED GRADE. STACKS SHALL BE MARKED FOR LOCATION AS INDICATED ON THE DETAILS.

S-17. FORCE MAIN SHALL BE LAID WITH DETECTOR TAPE LAID AT 6" ABOVE THE PIPE. THE DETECTOR TAPE MUST BEAR THE LABEL "PRESSURIZED WASTEWATER" IN 1.5 INCH HIGH LETTERS, REPEATED CONTINUOUSLY, FOR THE ENTIRE LENGTH OF THE FORCE MAIN.

STORM SEWER NOTES

ST-1. ALL STORM SEWERS SHALL MEET THE REQUIREMENTS OF THE CITY, FORT BEND COUNTY AND FORT BEND COUNTY DRAINAGE DISTRICT (WHEN APPLICABLE).

ST-2. ALL STORM SEWER MANHOLE AND INLET COVERS SHALL BE LABELED "STORM SEWER" IN ACCORDANCE WITH THE DETAILS.

ST-3. ALL STORM SEWER PIPE SHALL BE REINFORCED CONCRETE PIPE, A.S.T.M. C-76, CLASS III (MINIMUM) INSTALLED, BEDDED AND BACKFILLED IN ACCORDANCE WITH THE CITY DETAILS AND FORT BEND COUNTY DRAINAGE DISTRICT CRITERIA. ALL REINFORCED CONCRETE PIPE 42-INCH DIAMETER AND GREATER SHALL HAVE WATER-TIGHT RUBBER GASKET JOINTS. CONTRACTOR MAY USE TAL-COAT OR EQUAL FOR PIPE JOINTS WITH PIPE LESS THAN 42" DIAMETER. ALL STORM SEWER SHALL BE BACKFILLED WITH SELECT FILL MATERIAL COMPACTED TO 95% STANDARD PROCTOR COMPACTION, ASTM D-698, IN ACCORDANCE WITH THE DETAILS. CONTRACTOR SHALL USE MECHANICAL ROLLER OR MECHANICAL TAMPER IN COMPACTING ALL BACKFILL FOR PROJECT.

ST-4. ALL STORM SEWER STRUCTURES SUCH AS MANHOLES AND INLETS SHALL BE BACKFILLED WITH CEMENT STABILIZED SAND. CEMENT STABILIZED SAND BACKFILL SHALL EXTEND A MINIMUM OF TWENTY-FOUR INCHES (24") FROM THE OUTSIDE WALL OF ALL STRUCTURES. (2 SACKS OF CEMENT PER TON OF SAND.)

ST-5. AREAS ADJACENT TO THE PAVEMENT SHALL BE GRADED TO POSITIVELY DRAIN TOWARD INLETS, CONCRETE CURB AND/OR ROAD DITCHES IF DISTURBED DURING CONSTRUCTION. CONTRACTOR SHALL PROVIDE MATERIALS, LABOR AND EQUIPMENT TO PERFORM ALL GRADING OPERATIONS.

ST-6. CONTRACTOR SHALL ADJUST EXISTING WATER LINE MAINS AND WATER LINE SERVICES IN CONFLICT WITH A STORM SEWER. CONTRACTOR SHALL COORDINATE THE DISRUPTION OF WATER SERVICE DURING THE WATER LINE LOWERING OPERATION WITH THE CITY PUBLIC WORKS DEPARTMENT.

ST-7. ADJUST ALL STORM SEWER MANHOLE COVERS TO MATCH FINISHED GRADE ELEVATIONS.

ST-8. ALL PRECAST CONCRETE STRUCTURES SHALL BE REINFORCED AND SHALL BE DESIGNED TO WITHSTAND AASHTO H-20 LOADINGS.

ST-9. ALTERNATIVE STORM SEWER PIPE MATERIAL (WITH APPROVAL OF THE CITY):
A) STEEL: AWWA C200, 150 PSI FOR LINES 4-INCHES TO 12-INCHES, 235 PSI FOR LINES GREATER THAN 12-INCHES. ALL PIPE COATINGS SHALL BE IN ACCORDANCE WITH AWWA C210. ALL NUTS AND BOLTS SHALL BE EPOXY COATED.

B) DUCTILE IRON: AWWA C151 (ANSI A21.51) FOR LINES 4-INCHES TO 54-INCHES. PIPE SHALL BE LINED WITH POLYWRAP IN ACCORDANCE WITH AWWA C104 (ANSI A21.4).

STREET AND PAVING CONSTRUCTION NOTES

P-1. ALL PAVING SHALL BE CONSTRUCTED ACCORDING TO THE PLANS AND SPECIFICATIONS AND CITY REQUIREMENTS.

P-2. THE CONTRACTOR SHALL NOTIFY CITY PUBLIC WORKS DEPARTMENT AT LEAST 24 HOURS PRIOR TO ANY AND ALL SUBGRADE TESTING AND CONCRETE POURS.

P-3. ALL TEMPORARY AND PERMANENT SIGNAGE MUST COMPLY WITH THE LATEST REVISION OF THE "TEXAS MANUAL ON UNIFORM TRAFFIC CONTROL DEVICES".

P-4. CONTRACTOR SHALL PROTECT ALL UTILITIES, SIDEWALKS, PAVEMENT, ETC. AND SHALL REPAIR OR REPLACE ANY FACILITIES DAMAGED DURING PAVING OR GRADING OPERATIONS.

P-5. EXISTING PAVEMENTS, CURBS, SIDEWALKS DRIVEWAYS, ETC., DAMAGED OR REMOVED DURING CONSTRUCTION SHALL BE REPLACED ACCORDING TO THE CITY STANDARDS.

P-6. ALL DISTURBED AREAS WITHIN STREET RIGHT-OF-WAY AND EASEMENTS NOT COVERED BY PAVEMENT OR STRUCTURE SHALL BE HYDRO-MULCHED AND WATERED UNTIL VEGETATION ESTABLISHMENT.

P-7. AREAS TO BE FILLED SHALL BE CLEARED AND GRUBBED, SCARIFIED AND COMPACTED TO AT LEAST 95% OF MAXIMUM DENSITY (+/- 2% OF OPTIMUM MOISTURE) PER ASTM D-698, TO A DEPTH OF 6" PRIOR TO FILL PLACEMENT. FILL MATERIAL SHALL BE PLACED IN MAXIMUM 8" THICK LIFTS (MEASURED LOOSE) AND COMPACTED TO AT LEAST 95% OF MAXIMUM DENSITY (+/- 2% OF OPTIMUM MOISTURE) PER ASTM D-698. FILL SHALL BE CLEAN EARTH AND BE FREE FROM TRASH, VEGETATION AND LARGE STONES. TEST REPORTS INDICATING COMPLIANCE WITH DENSITY REQUIREMENTS SHALL BE SUBMITTED TO THE CITY PRIOR TO PLACEMENT OF PAVEMENT.

P-8. THE SUBGRADE IS TO BE SCARIFIED AND COMPACTED TO 95% STANDARD PROCTOR DENSITY (+/- 2% OF OPTIMUM MOISTURE) PER ASTM D-698. THE SUBGRADE SHALL BE STABILIZED TO 8" DEPTH WITH A MINIMUM EIGHT PERCENT (8%) LIME BY WEIGHT OR AS REQUIRED TO ACHIEVE A STABILIZED SOIL P.I. OF 20 OR LESS. LIME REQUIREMENTS SUBGRADE SHALL EXTEND A MINIMUM OF 2-FEET BEHIND THE BACK OF ALL CURB AND BEYOND THE EDGE OF PAVEMENT.

P-9. TESTING OF FILL, SUBGRADE AND PAVEMENT TO DOCUMENT COMPLIANCE WITH THE CITY REQUIREMENTS SHALL BE COMPLETED BY A CERTIFIED (REFERENCE: THE ASSOCIATION FOR LABORATORY ACCREDITATION) TESTING LABORATORY APPROVED BY THE CITY. A COPY OF ALL TEST RESULTS SHALL BE SUBMITTED TO THE CITY PUBLIC WORKS DIRECTOR.

P-10. ALL INTERSECTION EDGE RETURN RADII SHALL BE 25 FEET ON LOCAL RESIDENTIAL AND MINOR COLLECTOR STREETS. ALL CUL-DE-SAC RETURN RADII SHALL BE 35 FEET UNLESS NOTED OTHERWISE. MINIMUM GRADES AT INTERSECTIONS AND IN CUL-DE-SACS SHALL BE 1.00% MINIMUM GRADE ON CURB AND GUTTER STREETS SHALL BE 0.30%.

P-11. PAVING JOINTS (TRANSVERSE AND LONGITUDINAL) SHALL BE IN ACCORDANCE WITH THE DETAILS.

P-12. WHEN A THICKER PAVEMENT ROADWAY INTERSECTS WITH A THINNER PAVEMENT ROADWAY, THE THICKER PAVEMENT SHALL BE CONSTRUCTED FOR THE ENTIRE INTERSECTION TO THE CURB RETURNS ON ALL INTERSECTING STREETS.

P-13. WHERE PROPOSED PAVEMENT IS TO CONNECT TO EXISTING CONCRETE PAVEMENT, THE CONNECTION SHALL BE COMPLETED IN ACCORDANCE WITH THE PAVEMENT UNDERCUT DETAIL.

P-14. SIDEWALKS SHALL BE LOCATED AS SHOWN ON THE PLANS. SIDEWALK RAMP CONSTRUCTION SHALL BE IN CONFORMANCE WITH THE TEXAS ACCESSIBILITY STANDARDS (T.A.S.) AND CITY REQUIREMENTS.

P-15. ALL INTERSECTIONS SHALL BE CONSTRUCTED WITH SIDEWALK RAMPS IN ACCORDANCE WITH THE TEXAS ACCESSIBILITY STANDARDS, THE AMERICAN DISABILITIES ACT AND THE CITY REQUIREMENTS.

P-16. CONCRETE SHALL CONTAIN A MINIMUM 5-1/2 SACKS OF PORTLAND CEMENT PER CUBIC YARD OF CONCRETE WITH A MINIMUM 3500 PSI COMPRESSIVE STRENGTH AT 28 DAYS. CONCRETE SHALL HAVE A SLUMP OF 4 INCHES WITH ALLOWABLE DIFFERENCES OF 1 AND AN AIR CONTENT OF 4.5 PERCENT. AIR ENTRAINMENT ADMIXTURES SHALL CONFORM TO ASTM C260. FLYASH IS NOT ALLOWED.

P-17. CONCRETE PAVEMENT THICKNESSES SHALL BE CONSTRUCTED IN ACCORDANCE WITH THE DETAILS. REINFORCING STEEL SHALL CONFORM TO ASTM A-615, GRADE 60. A MINIMUM OF 18" LAPS ON ALTERNATE STEEL BARS SHALL BE PROVIDED. ALL REINFORCING STEEL SHALL BE SECURELY TIED AND SUPPORTED WITH BAR CHAIRS IN ACCORDANCE WITH ACI STANDARDS. ALL RE-BAR TO BE 100% TIED, OVERLAPS WILL BE DOUBLE TIED.
SPACING FOR REINFORCING STEEL SHALL BE AS FOLLOWS:
1. 7" CONCRETE PAVEMENT - #4 BAR ON 18" CENTER EACH WAY.

2. 6" CONCRETE PAVEMENT AND DRIVEWAYS - #4 BAR ON 18" CENTER EACH WAY.

3. SIDEWALKS AND CONCRETE SLOPE PAVEMENT - MINIMUM 4-1/2" THICK CONCRETE - #3 BAR ON 24" CENTER EACH WAY. (2% CROSS SLOPE MAXIMUM)
WIRE MESH IS NOT ALLOWED IN SIDEWALKS OR STREETS WITHIN THE CITY OF RICHMOND OR ITS ETJ.

P-18. CONCRETE SHALL NOT BE PLACED WHEN THE AMBIENT TEMPERATURE IS 40 DEGREES FAHRENHEIT AND FALLING. CONCRETE MAY BE PLACED IF THE AMBIENT TEMPERATURE IS 35 DEGREES AND RISING. CONTRACTOR SHALL PROVIDE AN APPROVED COVERING MATERIAL (COTTON MATS, POLYETHYLENE SHEETING, ETC.) IN THE EVENT TEMPERATURE SHOULD FALL BELOW 32 DEGREES FAHRENHEIT WITHIN 72 HOURS OF PLACING CONCRETE. NO SALT OR OTHER CHEMICALS SHALL BE ADDED TO CONCRETE TO PREVENT FREEZING. NO CONCRETE SHALL BE PLACED WHEN THE MIXTURE TEMPERATURE IS ABOVE 95 DEGREES FAHRENHEIT. CONCRETE SHALL BE PLACED WITHIN 60 MINUTES OF THE BATCH TIME.

P-19. ALL CONCRETE PLACED SHALL BE UNIFORMLY SPRAYED WITH A MEMBRANE CURING COMPOUND (TXDOT DMS-4650, TYPE 2, WHITE). CURING COMPOUND SHALL BE APPLIED IN ACCORDANCE WITH TXDOT STANDARD SPECIFICATIONS.

P-20. CONCRETE SAMPLES: CYLINDERS (SET OF 4), SLUMP AND AIR ENTRAINMENT TESTS ARE REQUIRED FOR EACH 100 CUBIC YARDS AND EACH FRACTION THEREOF. A MINIMUM OF ONE SET OF SAMPLES IS REQUIRED PER CONCRETE POUR. THE CITY RESERVES THE RIGHT TO REQUEST ADDITIONAL TESTS.

P-21. FINISHED PAVEMENT SHALL HAVE CORE SAMPLES TAKEN EVERY 750 LINEAR FEET (750'), STAGGERED ACROSS THE ROADWAY CROSS-SECTION, AND IN EVERY CUL-DE-SAC. ADDITIONAL CORE SAMPLES MAY BE REQUIRED AT THE DISCRETION OF THE CITY ENGINEER. THESE CORE SAMPLES SHALL BE TESTED TO INSURE THAT THE PAVEMENT THICKNESS MEETS THE REQUIRED PROJECT THICKNESS.

P-22. PROPER TESTING AND LABORATORY DOCUMENTATION IS REQUIRED. FAILURE TO MEET THE MINIMUM PAVEMENT REQUIREMENTS WILL RESULT IN THE REJECTION OF PAVEMENT. IMMEDIATE REMOVAL AND REPLACEMENT OF SUBSTANDARD PAVEMENT SECTIONS WILL BE NECESSARY TO SATISFY THESE REQUIREMENTS.

P-23. CRACKS 1/16 INCH OR LARGER ARE NOT ACCEPTABLE IN NEW PAVEMENT. CRACKS 1/16 INCH OR LESS WILL BE ADDRESSED AN INDIVIDUAL BASIS, SUBJECT TO APPROVAL OR REJECTION.

P-24. STREET NAME SIGNS SHALL BE LOCATED AT ALL INTERSECTIONS. CONTRACTOR SHALL VERIFY STREET NAME WITH RECORDED PLAT. STOP SIGNS AND OTHER TRAFFIC SIGNAGE SHALL BE PLACED IN ACCORDANCE WITH THE PLANS AND THE "TEXAS MANUAL ON UNIFORM TRAFFIC CONTROL DEVICES."

P-25. A DOUBLE-REFLECTORIZED BLUE TRAFFIC PAVEMENT MARKER SHALL BE PLACED ONE FOOT OFFSET OF THE PAVEMENT CENTERLINE ON FIRE HYDRANT SIDE, AT ALL FIRE HYDRANT LOCATIONS, BY THE PAVING CONTRACTOR. FIRE HYDRANTS LOCATED AT INTERSECTIONS SHALL HAVE A MARKER PLACED ON EACH STREET.

P-26. ALL PAVEMENT MARKINGS SHALL BE REFLECTORIZED, PERMANENT PREFABRICATED PAVEMENT MARKINGS MEETING THE MINIMUM REQUIREMENTS OF TxDOT, DMS-8240, TYPE A OR B, INSTALLED IN ACCORDANCE WITH TxDOT STANDARD SPECIFICATION ITEM 668. CENTERLINE PAVEMENT MARKINGS, STOP BARS AND MISCELLANEOUS MARKINGS SHALL HAVE A MINIMUM THICKNESS OF 90 MILS. LANE DELINEATION AND ROAD EDGE PAVEMENT MARKINGS SHALL HAVE A MINIMUM THICKNESS OF 60 MILS. ALL PAVEMENT MARKINGS SHALL BE INSTALLED WITH DOUBLE ADHESIVE AS REQUIRED BY THE CITY. OUTSIDE THE CITY (IN THE ETJ) COMPLY WITH FORT BEND COUNTY REQUIREMENTS.

P-27. ALL DRIVEWAYS SHALL BE LOCATED TO AVOID EXISTING CURB INLET STRUCTURES.

P-28. CONCRETE MIX DESIGN SHALL BE SENT TO THE CITY FOR APPROVAL WITH A MINIMUM OF 72 HOURS BEFORE THE FIRST CONCRETE POUR.

P-29. VEHICLES OF ALL TYPES ARE PROHIBITED FROM DRIVING ON NEW PAVEMENTS THREE (3) DAYS AFTER THE PLACING OF CONCRETE AND UNTIL THE CONCRETE HAS REACHED A MINIMUM OF 3500 PSI.

P-30. THE SUBGRADE SURFACE SHALL BE SMOOTH AND IN CONFORMITY WITH LINES & GRADES ON THE PLANS. WHEN THE SUBGRADE FAILS TO MEET DENSITY REQUIREMENTS OR SHOULD IT LOSE THE REQUIRED STABILITY, DENSITY, OR FINISH, IT SHALL BE REWORKED IN ACCORDANCE WITH TxDOT SUBARTICLE 260.4:

(7) "REWORKING A SECTION", WHICH MAY REQUIRE AN ADDITIONAL 25% OF THE SPECIFIED LIME AMOUNT.

P-31. FLOODING OF THE STREETS SHALL OCCUR 24 HOURS PRIOR TO THE INITIAL INSPECTION.

P-32. SUBGRADE DENSITIES SHALL BE RETAKEN IN THE EVENT OF A 1 INCH (1") OR GREATER RAINFALL OR IN THE EVENT THE AMBIENT AIR TEMPERATURE FALLS BELOW 32 DEGREES FAHRENHEIT FOR GREATER THAN THREE HOURS. SUBGRADE DENSITIES SHALL BE RETAKEN IF CONCRETE HAS NOT BEEN PLACED WITHIN 14 CALENDAR DAYS FROM FINAL COMPACTION.

SPECIAL NOTES

SN-1. BEFORE THE INITIAL WALK-THROUGH IS SCHEDULED,

SN-2. NEGATIVE BACTERIOLOGICAL RESULTS FOR PUBLIC WATER LINES MUST BE SUBMITTED TO PUBLIC WORKS.

SN-3. SATISFACTORY MANDREL, HYDROSTATIC, SANITARY, AND MANHOLE VACUUM TESTS, MUST BE COMPLETED.

SN-4. THE STORM SYSTEM MUST BE COMPLETELY CLEANED FOR A LAMP INSPECTION BEFORE OR THE DAY OF THE WALK-THROUGH FOR ACCEPTANCE.

SN-5. THE MANHOLES, GRATES, VALVES AND HYDRANTS PROPERLY ADJUSTED/PAINTED TO THE CITY OF RICHMOND'S COLOR CODE.

TEXAS COMMISSION ON ENVIRONMENTAL QUALITY WATER DISTRIBUTION SYSTEM GENERAL CONSTRUCTION NOTES

TEXAS COMMISSION ON ENVIRONMENTAL QUALITY
WATER DISTRIBUTION SYSTEM
GENERAL CONSTRUCTION NOTES

1. This water distribution system must be constructed in accordance with the current Texas Commission on Environmental Quality (TCEQ) Rules and Regulations for Public Water Systems 30 Texas Administrative Code (TAC) Chapter 290 Subchapter D. When conflicts are noted with local standards, the more stringent requirement shall be applied. Construction for public water systems must always, at a minimum, meet TCEQ's "Rules and Regulations for Public Water Systems.

2. An appointed engineer shall notify in writing the local TCEQ's Regional Office when construction will start. Please keep in mind that upon completion of the water works project, the engineer or owner shall notify the commission's Water Supply Division, in writing, as to its completion and attest to the fact that the work has been completed essentially according to the plans and change orders on file with the commission as required in 30 TAC §290.39(h)(3).

3. All newly installed pipes and related products must conform to American National Standards Institute/National Sanitation Foundation (ANSI/NSF) Standard 61-G and must be certified by an organization accredited by ANSI, as required by 30 TAC §290.44(a)(1).

4. Plastic pipe for use in public water systems must bear the National Sanitation Foundation Seal of Approval (NSF pw-G) and have an ASTM design pressure rating of at least 150 psi or a standard dimension ratio of 26 or less, as required by 30 TAC §290.44(a)(2).

5. No pipe which has been used for any purpose other than the conveyance of drinking water shall be accepted or relocated for use in any public drinking water supply, as required by 30 TAC §290.44(a)(3).

6. Water transmission and distribution lines shall be installed in accordance with the manufacturer's instructions. However, the top of the water line must be located below the frost line and in no case shall the top of the water line be less than 24 inches below ground surface, as required by 30 TAC §290.44(a)(4).

7. Pursuant to 30 TAC §290.44(a)(5), the hydrostatic leakage rate shall not exceed the amount allowed or recommended by the most current AWWA formulas for PVC pipe, cast iron and ductile iron pipe. Include the formulas in the notes on the plans.

a. The hydrostatic leakage rate for polyvinyl chloride (PVC) pipe and appurtenances shall not exceed the amount allowed or recommended by formulas in America Water Works Association (AWWA) C-605 as required in 30 TAC §290.44(a)(5). Please ensure that the formula for this calculation is correct and most current formula is in use;

$$Q = \frac{LD\sqrt{P}}{148,00}$$

Where:

Q = the quantity of makeup water in gallons per hour,
L = the length of the pipe section being tested, in feet,
D = the nominal diameter of the pipe in inches, and
P = the average test pressure during the hydrostatic test in pounds per square inch (psi).

b. The hydrostatic leakage rate for ductile iron (DI) pipe and appurtenances shall not exceed the amount allowed or recommended by formulas in America Water Works Association (AWWA) C-600 as required in 30 TAC §290.44(a)(5). Please ensure that the formula for this calculation is correct and most current formula is in use;

$$L = \frac{SD\sqrt{P}}{148,00}$$

Where:

L = the quantity of makeup water in gallons per hour,
S = the length of the pipe section being tested, in feet,
D = the nominal diameter of the pipe in inches, and
P = the average test pressure during the hydrostatic test in pounds per square inch (psi).

8. Projects constructed on or after January 4, 2014 must comply with changes to the Safe Drinking Water Act that reduce the maximum allowable lead content of pipes, pipe fittings, plumbing fittings, and fixtures to 0.25 percent.

9. The system must be designed to maintain a minimum pressure of 35 psi at all points within the distribution network at flow rates of at least 1.5 gallons per minute per connection. When the system is intended to provide firefighting capability, it must also be designed to maintain a minimum pressure of 20 psi under combined fire and drinking water flow conditions as required by 30 TAC §290.44(d).

10. The contractor shall install appropriate air release devices in the distribution system at all points where topography or other factors may create air locks in the lines. All vent openings to the atmosphere shall be covered with 16-mesh or finer, corrosion resistant screening material or an acceptable equivalent as required by 30 TAC §290.44(d)(1).

11. Pursuant to 30 TAC §290.44(d)(4), accurate water meters shall be provided. Service connections and meter locations should be shown on the plans.

12. Pursuant to 30 TAC §290.44(d)(5), sufficient valves and blowoffs to make repairs. The engineering report shall establish criteria for this design.

13. Pursuant to 30 TAC §290.44(d)(6), the system shall be designed to afford effective circulation of water with a minimum of dead ends. All dead-end mains shall be provided with acceptable flush valves and discharge piping. All dead-end lines less than two inches in diameter will not require flush valves if they end at a customer service. Where dead ends are necessary as a stage in the growth of the system, they shall be located and arranged to ultimately connect the ends to provide circulation.

14. The contractor shall maintain a minimum separation distance in all directions of nine feet between the proposed waterline and wastewater collection facilities including manholes and septic tank drainfields. If this distance cannot be maintained, the contractor must immediately notify the project engineer for further direction. Separation distances, installation methods, and materials utilized must meet 30 TAC §290.44(e)(1-4) of the current rules.

15. Pursuant to 30 TAC §290.44(e)(5), the separation distance from a potable waterline to a wastewater main or lateral manhole or cleanout shall be a minimum of nine feet. Where the nine-foot separation distance cannot be achieved, the potable waterline shall be encased in a joint of at least 150 psi pressure class pipe at least 18 feet long and two nominal sizes larger than the new conveyance. The space around the carrier pipe shall be supported at five-foot intervals with spacers or be filled to the springline with washed sand. The encasement pipe shall be centered on the crossing and both ends sealed with cement grout or manufactured sealant.

16. Pursuant to 30 TAC §290.44(e)(6), fire hydrants shall not be installed within nine feet vertically or horizontally of any wastewater line, wastewater lateral, or wastewater service line regardless of construction.

17. Pursuant to 30 TAC §290.44(e)(7), suction mains to pumping equipment shall not cross wastewater mains, wastewater laterals, or wastewater service lines. Raw water supply lines shall not be installed within five feet of any tile or concrete wastewater main, wastewater lateral, or wastewater service line.

18. Pursuant to 30 TAC §290.44(e)(8), waterlines shall not be installed closer than ten feet to septic tank drainfields.

19. Pursuant to 30 TAC §290.44(f)(1), the contractor shall not place the pipe in water or where it can be flooded with water or sewage during its storage or installation.

20. Pursuant to 30 TAC §290.44(f)(2), when waterlines are laid under any flowing or intermittent stream or semi-permanent body of water the water main shall be installed in a separate watertight pipe encasement. Valves must be provided on each side of the crossing with facilities to allow the underwater portion of the system to be isolated and tested.

21. The contractor shall disinfect the new water mains in accordance with AWWA Standard C-651 and then flush and sample the lines before being placed into service. Samples shall be collected for microbiological analysis to check the effectiveness of the disinfection procedure which shall be repeated if contamination persists. A minimum of one sample for each 1,000 feet of completed water line will be required or at the next available sampling point beyond 1,000 feet as designated by the design engineer, in accordance with 30 TAC §290.44(f)(3).

NO.	DATE	REVISIONS	APP.

CITY OF RICHMOND
STANDARD CONSTRUCTION DETAILS
NOTES

RICHMOND TEXAS 1837 COUNTY SEAT OF FORT BEND

SCALE		
HORIZONTAL	1" = NTS	DESIGNED BY: LLT
VERTICAL	1" = NTS	DRAWN BY: TWB
		CHECKED BY: CBA
		DATE: 3/22/19
		JOB NO:
		DWG. NO:
		R-1-19
		Sheet:

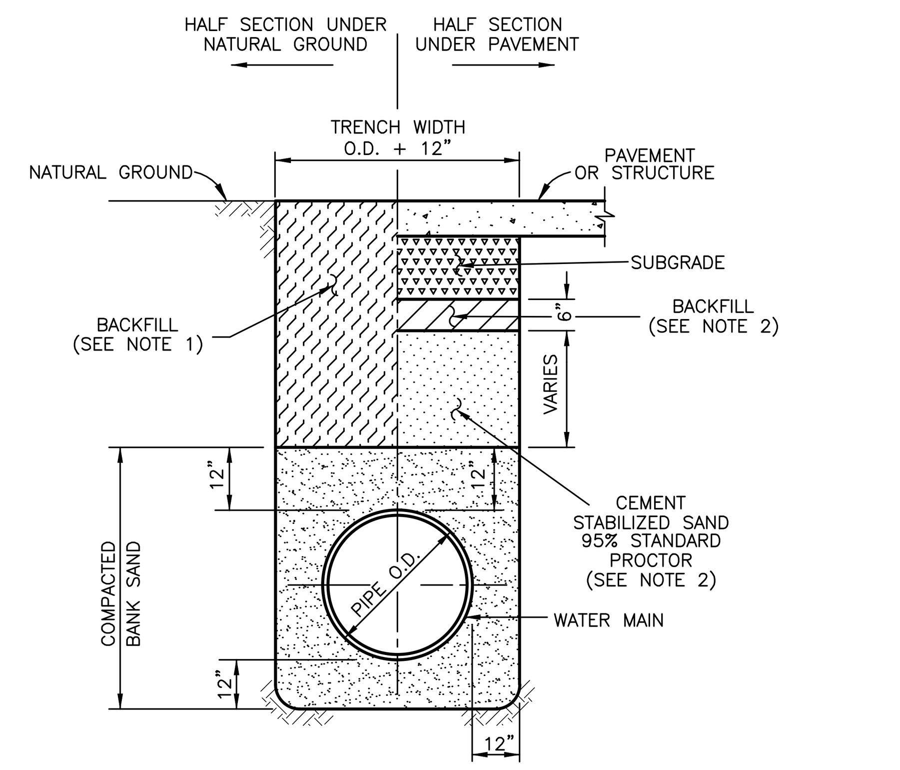

NOTES

1. BACKFILL SHALL BE NATIVE SOIL, FREE OF DEBRIS, PLACED IN LIFTS, 8" THICK OR LESS, COMPACTED TO 95% STANDARD PROCTOR DENSITY, EXCEPT AS REQUIRED BELOW.
2. BACKFILL UNDER AND WITHIN 3 FEET OF DRIVEWAYS AND PUBLIC STREETS SHALL BE CEMENT STABILIZED SAND (2 SACKS OF CEMENT PER TON OF SAND), EXCEPT THE TOP 6" SHALL BE NATIVE SOIL, FREE OF DEBRIS. ALL BACKFILL UNDER PAVING SHALL BE COMPACTED TO 95% STANDARD PROCTOR DENSITY.
3. TRENCH SHORING, IN ACCORDANCE WITH OSHA, SHALL BE INSTALLED AS REQUIRED.
4. ALL EXCAVATED MATERIAL WITH A P.I. OF 12 OR LESS MAY BE USED AS BACKFILL WITH FIELD APPROVAL BY THE CITY.

1. WATER LINE BEDDING

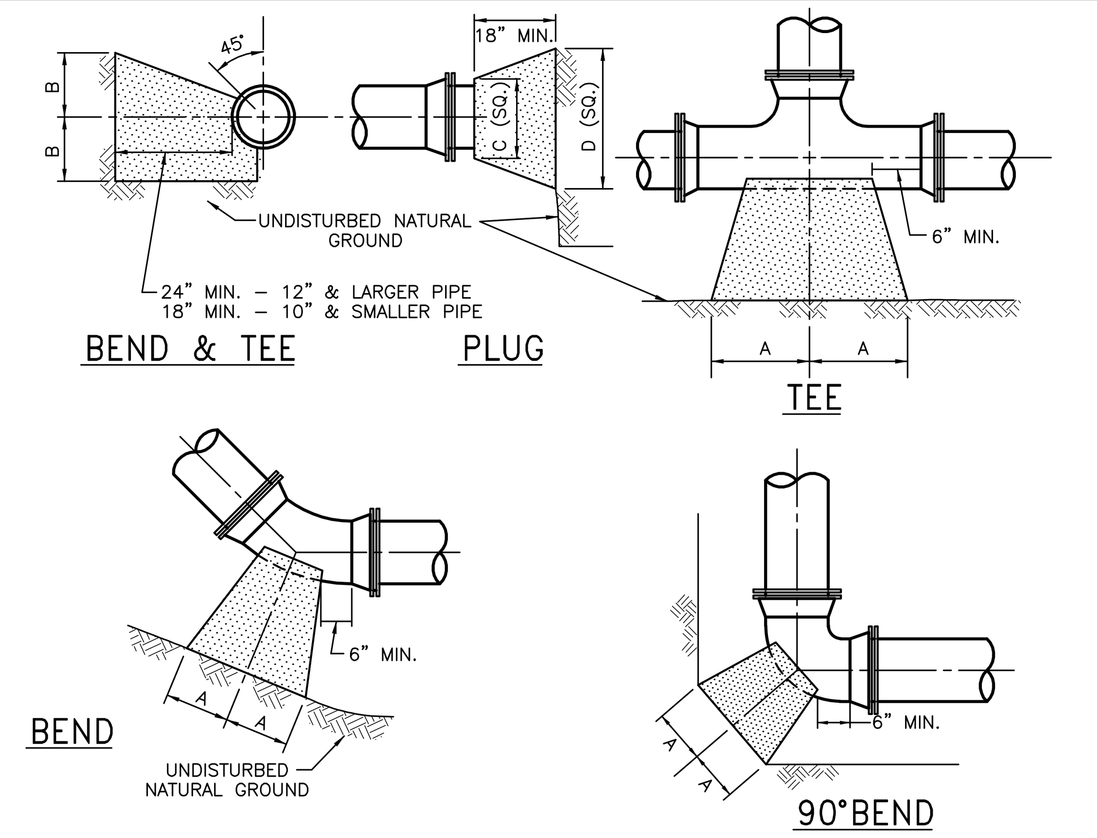

SIZE	90° BEND		45° BEND		22½° BEND		TEES		PLUGS	
	A	B	A	B	A	B	A	B	C	D
2½"	12"	7"	6"	7"	6"	6"	7"	8"	8"	14"
4"	14"	8"	7"	9"	6"	6"	8"	11"	8"	18"
6"	16"	10"	9"	10"	6"	8"	10"	12"	10"	21"
8"	22"	13"	12"	13"	8"	10"	13"	16"	12"	29"
12"	29"	21"	16"	21"	11"	16"	18"	24"	16"	41"
16"	38"	27"	21"	27"	12"	24"	24"	30"	20"	54"

NOTES:
1. THRUST BLOCKS AT TRENCH FACE MUST HAVE A MINIMUM BEARING SURFACE OF 1.0 SQ. FOOT AND THE LEAST DIMENSION SHALL BE NO SMALLER THAN 1.5 TIMES PIPE DIAMETER, BUT NOT LESS THAN 1.0 FT.
2. ALL CONCRETE SHALL BE 3500 PSI AND BE PLACED AT ALL FITTINGS.
3. ALL FITTINGS SHALL BE M.J. RESTRAINED JOINT (EBAA IRON, SERIES 2000PV, OR APPROVED EQUAL) AND WRAPPED IN 8 MIL PLASTIC.

2. THRUST BLOCK

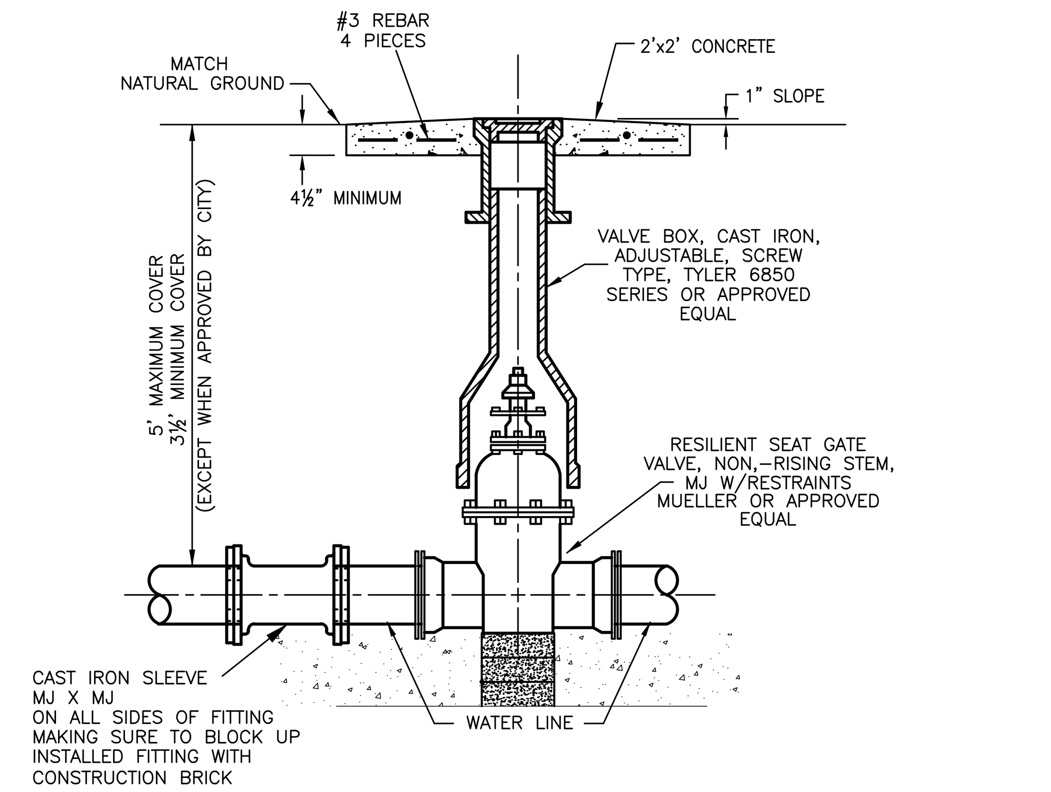

NOTES:
1. PROVIDE OPERATING NUT EXTENSION, AS NEEDED, TO APPROXIMATELY THREE (3) FEET BELOW FINISHED GRADE.
2. VALVE BOX SHALL NOT TRANSMIT ANY LOAD DIRECTLY TO THE VALVE OR PIPE.
3. GATE VALVES SHALL BE COUNTER–CLOCKWISE OPEN.
4. TAPPING VALVES ARE NOT ALLOWED WHEN TAP IS SAME SIZE AS THE EXISTING MAIN EXCEPT WHEN APPROVED BY PUBLIC WORKS.
5. FOR CUT IN VALVES OR FITTINGS, PROVIDE CAST IRON SLEEVE WITH MJ X MJ ON ALL SIDES OF VALVE/FITTING. BLOCK UP INSTALLED FITTING WITH CONSTRUCTION BRICK(S).

3. GATE VALVE AND BOX

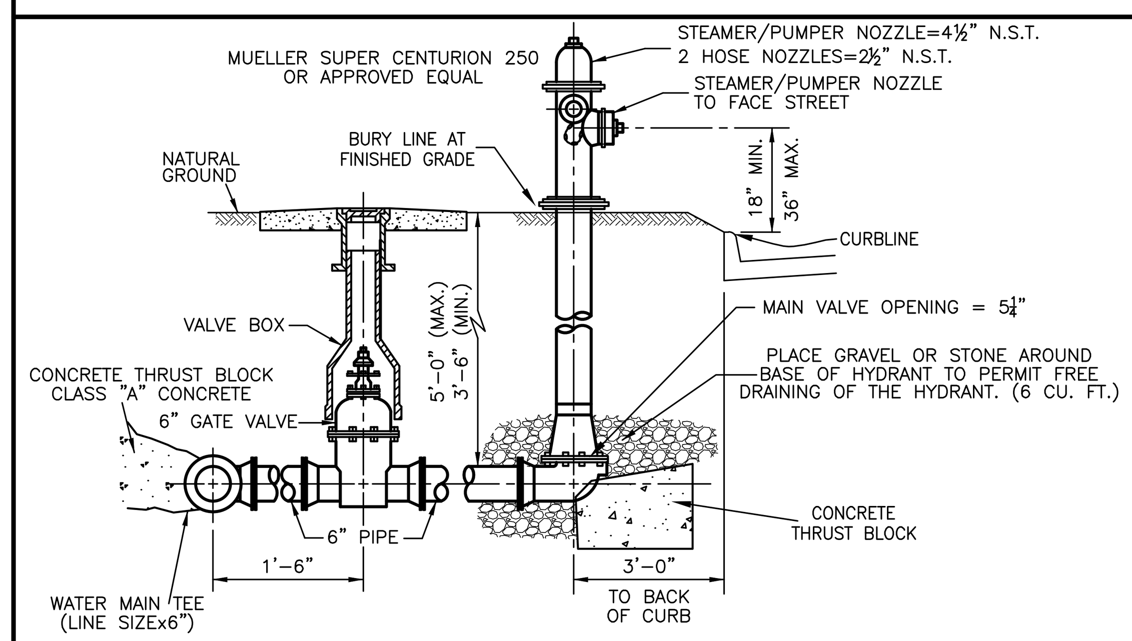

NOTES:
1. 5/8" ALL–THREAD IS TO BE USED TO TIE VALVE TO TEE AND VALVE TO HYDRANT.
2. PROVIDE MECHANICAL RESTRAINED JOINTS (EBBA IRON, SERIES 2000PV, OR APPROVED EQUAL).
3. PAINT ALL FIRE HYDRANT BARRELS CHROME ALUMINUM (ACE HARDWARE 253A110) OR AN APPROVED EQUAL BY THE CITY OF RICHMOND.

PAINT BONNET AND CAPS IN ACCORDANCE WITH CITY OF RICHMOND REQUIREMENTS BASED ON MAINLINE SIZE. (COLORS: YELLOW–6" AND LESS; WHITE–8"; GREEN–10" TO 20"; ORANGE–24" TO 60").

4. FIRE HYDRANT

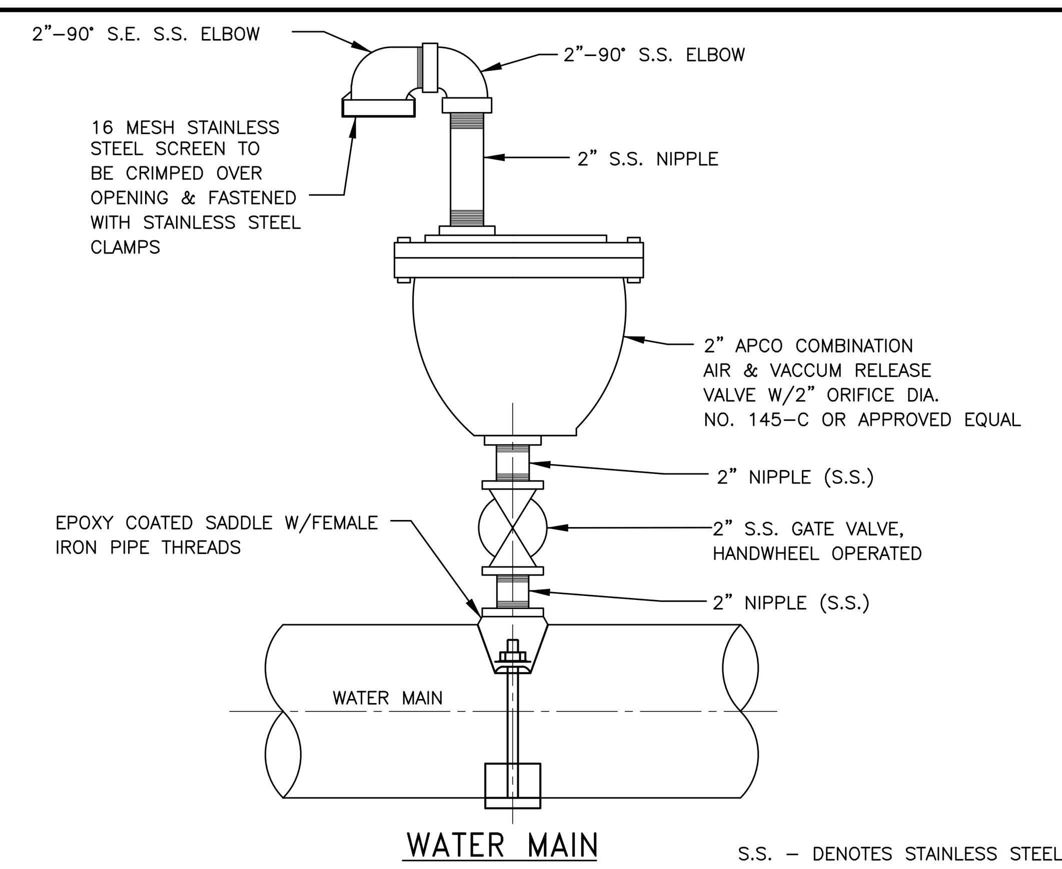

S.S. – DENOTES STAINLESS STEEL

5. AIR RELEASE VALVE

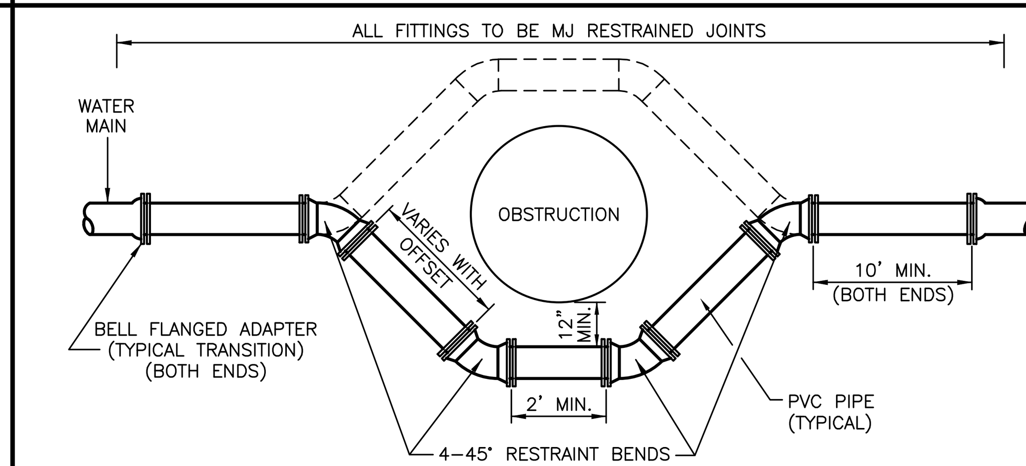

FOR A LINE TO PASS OVER AN OBSTRUCTION RATHER THAN UNDER, IT MUST HAVE ADEQUATE COVER AND BE APPROVED BY DEPARTMENT OF PUBLIC WORKS.

NOTES:
1. PIPE MATERIAL SHALL BE AWWA C900 PVC, DR–14, 200 PSI WITH INTEGRAL PVC RESTRAINED JOINTS.
2. OFFSET ASSEMBLY MUST PASS OVER THE OBSTRUCTION AS LONG AS THE MINIMUM CLEARANCE IS MAINTAINED. SPECIFIC APPROVAL FROM THE UTILITIES DEPARTMENT MUST BE GRANTED FOR THE OFFSET TO PASS UNDER THE OBSTRUCTION.
3. MATERIAL AND COATINGS SHALL BE IN ACCORDANCE WITH WATER MAIN STANDARD SPECIFICATIONS.
4. RESTRAIN EXISTING PIPING BEYOND OFFSET SECTION AS REQUIRED TO PREVENT MOVEMENT.
5. ALL PVC PRODUCTS MUST BE LISTED ON CITY OF RICHMOND'S APPROVED PRODUCTS LIST.

6. WATER PIPE OFFSET ASSEMBLY

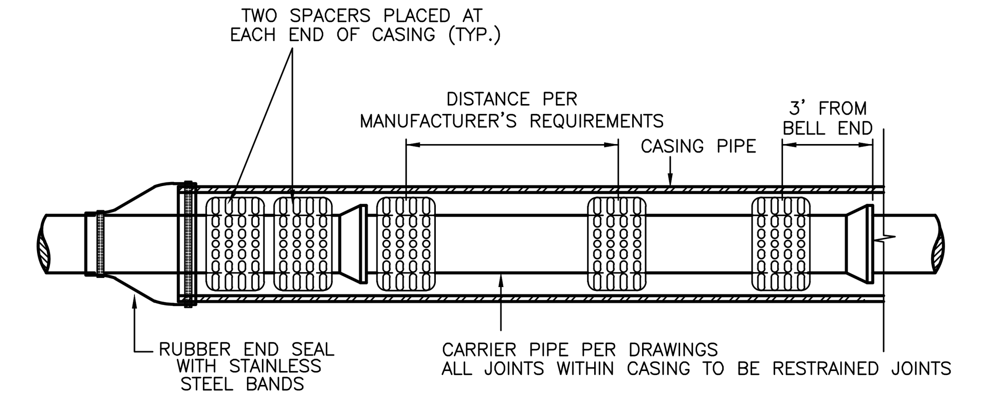

SPACERS SHALL BE RACI HIGH DENSITY POLYETHYLENE OR APPROVED EQUAL.

SPACERS SHALL BE SIZED TO CENTER PIPE INSIDE THE CASING.

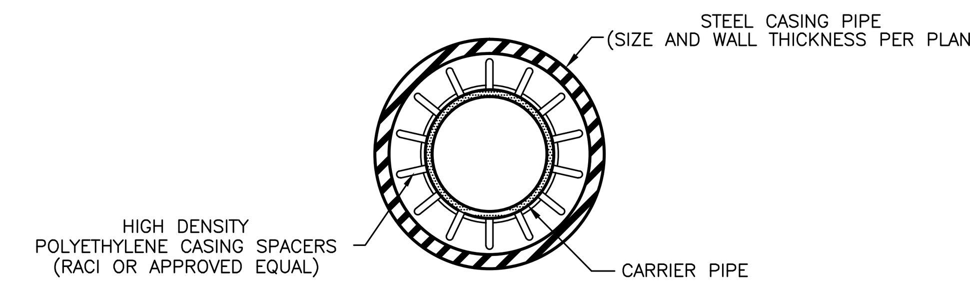

NOTES:

1. CASING SPACERS SHALL BE USED TO INSTALL THE CARRIER PIPE INSIDE THE ENCASEMENT PIPE TO PROVIDE SUPPORT AROUND THE PERIPHERY OF THE PIPE. MINIMUM CLEARANCE BETWEEN MAXIMUM O.D. OF CARRIER PIPE AND I.D. OF CASING SHALL BE ONE INCH.
2. SPACERS SHALL BE PROJECTION TYPE, WITH A MINIMUM NUMBER OF PROJECTIONS AROUND THE CIRCUMFERENCE EQUAL TO THE NUMBER OF DIAMETER INCHES OF THE CARRIER PIPE. CASING SPACERS SHALL BE TOTALLY NON–METALLIC SPACERS CONSTRUCTED OF INTERLOCKING PREFORMED SECTIONS OF HIGH DENSITY POLYETHYLENE. SPACERS SHALL BE ISO 9002 CERTIFIED FOR STRENGTH AND QUALITY.
3. THE ENDS OF THE CASING SHALL BE SEALED USING PWM MODEL 1 WA WRAP AROUND END SEAL MADE OF 1/8" THICKNESS RUBBER AND STAINLESS STEEL BANDS, OR APPROVED EQUAL.
4. EXTEND CASING A MINIMUM OF 5' BEYOND EDGE OF PAVEMENT.

PVC PIPE IN CASING

DR18 C900/C905 PVC PIPE	OD"	BELL OD"	STEEL CASING DIAMETER	RACI SPACERS MODEL*
4"	4.80"	6.38"	10"	2F 41
6"	6.90"	8.88"	12"	2F, 1G 41
8"	9.05"	11.38"	14"	3F, 1G 41
10"	11.10"	13.97"	16"	4F 41
12"	13.20"	16.34"	20"	5F 60
14"	15.30"	18.23"	22"	6F 60
16"	17.40"	20.58"	24"	7F 60
20"	21.60"	26.85"	30"	6M 90

7. WATER LINE CASING

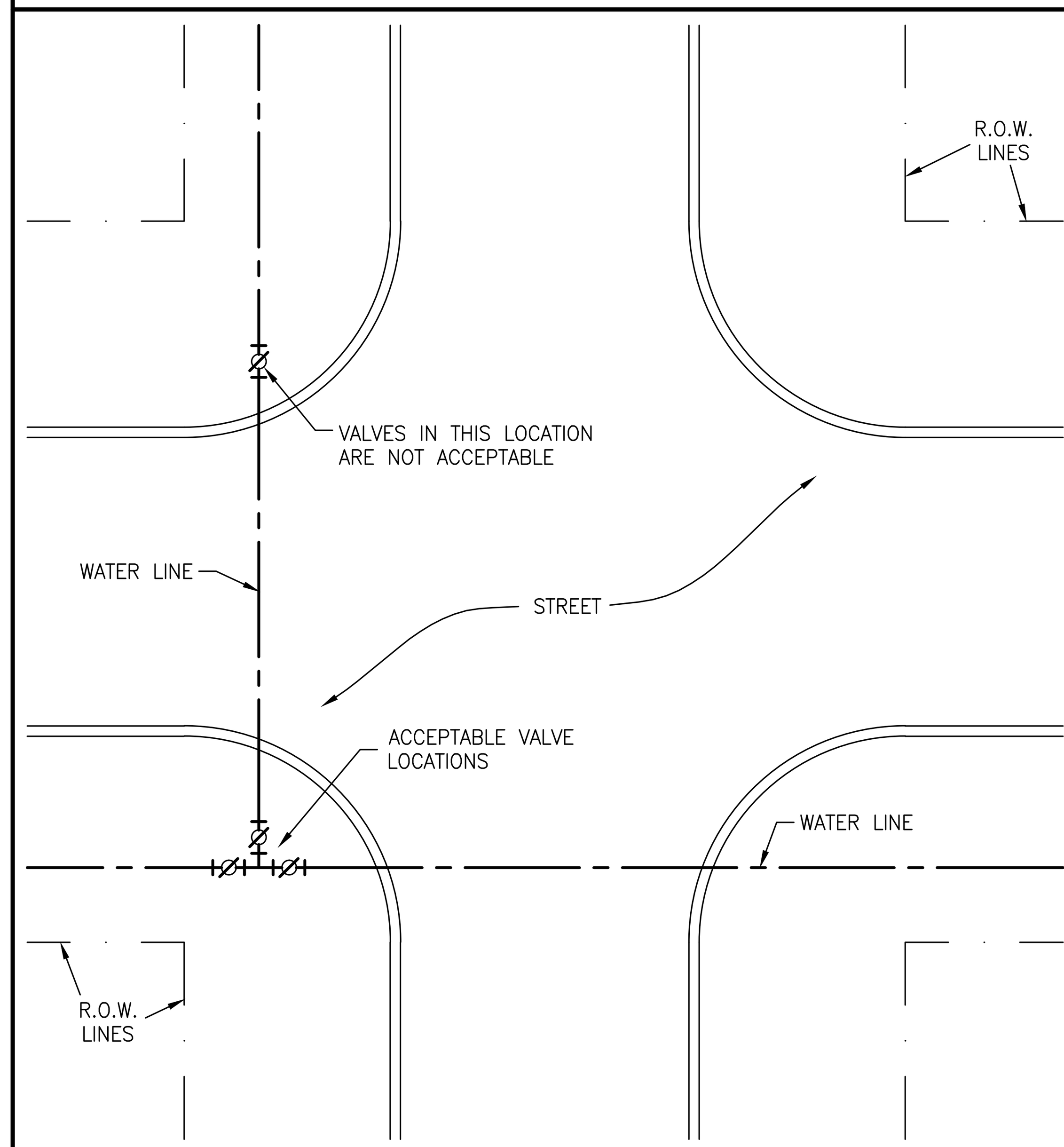

8. VALVE LOCATION PLAN

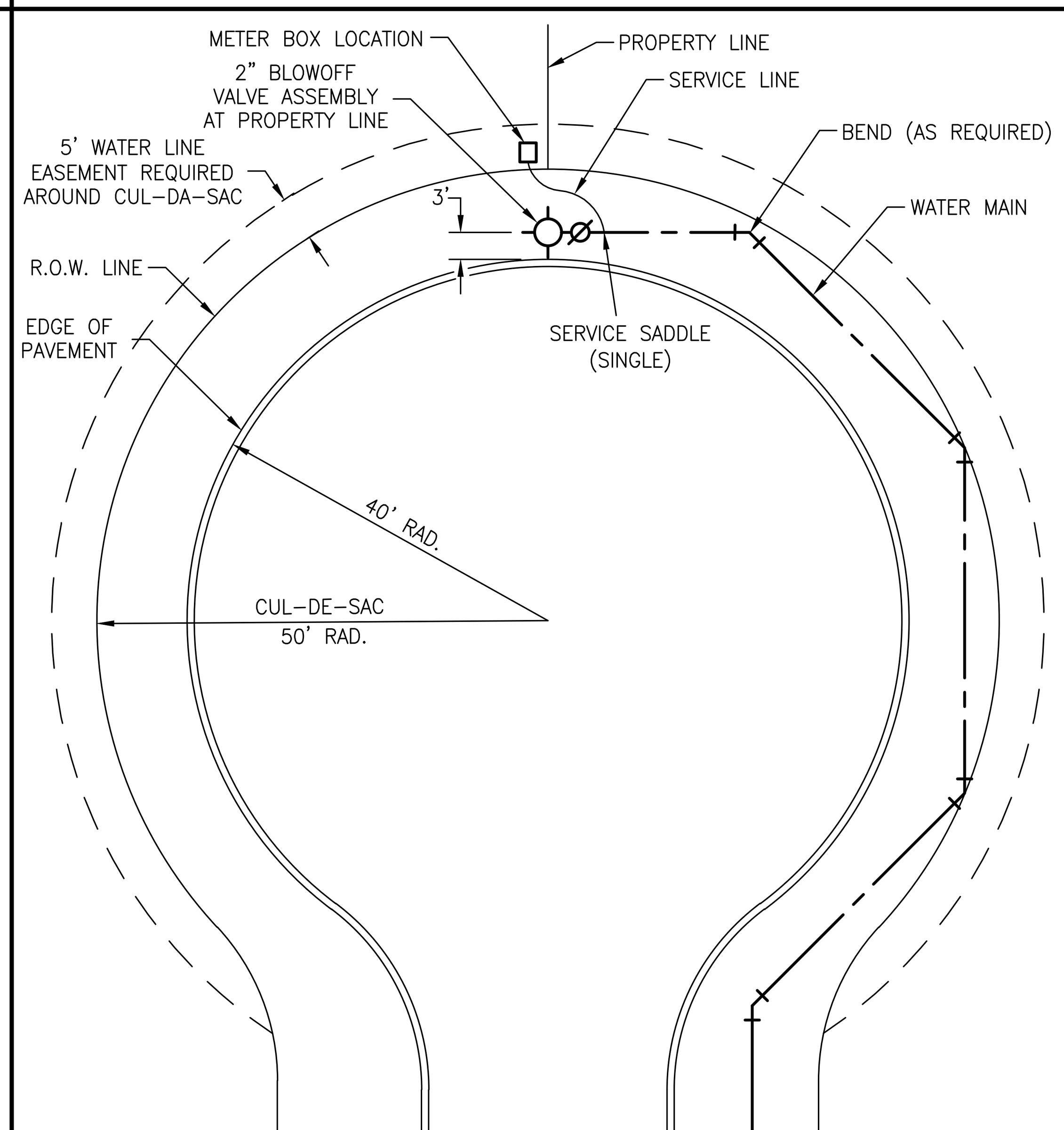

9. BLOWOFF LOCATION PLAN

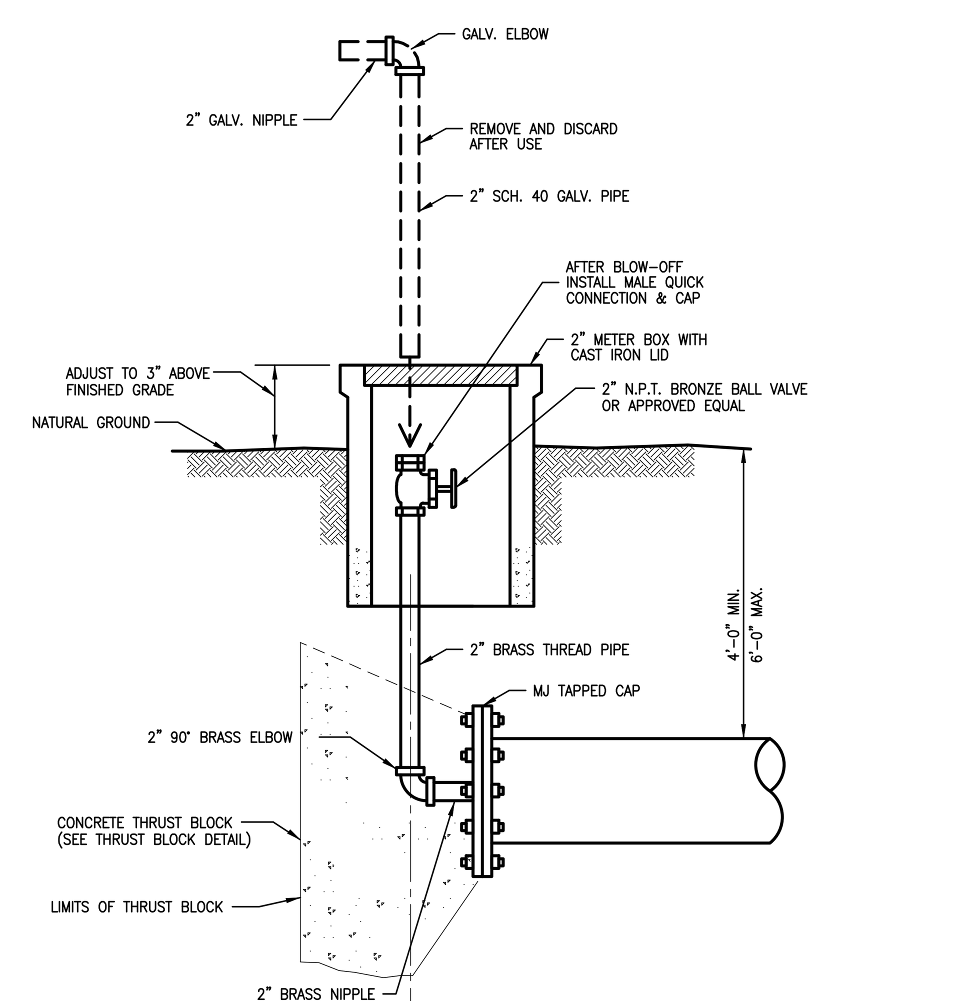

NOTE:
1. ON OPEN–DITCH ROADWAYS, SET THE FLUSHING HYDRANTS WITHIN 3 FEET OF ROAD RIGHT–OF–WAY LINE.
2. ALL PIPING AND FITTINGS SHALL BE BRASS ALL THE WAY TO THE SADDLE.

10. 2" BLOWOFF VALVE ASSEMBLY

NO.	DATE	REVISIONS	APP.

CITY OF RICHMOND
STANDARD CONSTRUCTION DETAILS

WATER–1

SCALE		
HORIZONTAL	1" = NTS	DESIGNED BY: LLT
VERTICAL	1" = NTS	DRAWN BY: TWB
		CHECKED BY: CBA

DATE: 3/22/19

JOB NO:

DWG. NO:

R–2–19

Sheet:

File Name:W:\Details\Richmond\2019 COR STANDARD\R–2–19 – water.dwg
Layout Tab:W–1
Save date:Tuesday, March 19, 2019 9:32:26 AM Plot date:Tuesday, March 19, 2019 9:47:49 AM

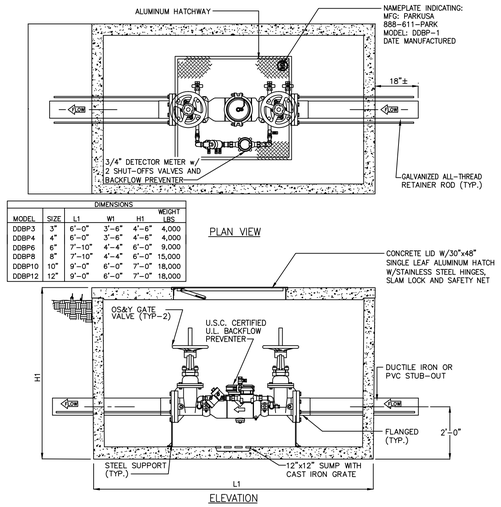

DIMENSIONS					
MODEL	SIZE	L1	W1	H1	WEIGHT LBS.
DDBP3	3"	6'-0"	3'-6"	4'-6"	4,000
DDBP4	4"	6'-0"	3'-6"	4'-6"	4,000
DDBP6	6"	7'-10"	4'-4"	6'-0"	9,000
DDBP8	8"	7'-10"	4'-4"	6'-0"	15,000
DDBP10	10"	9'-0"	6'-0"	7'-0"	18,000
DDBP12	12"	9'-0"	6'-0"	7'-0"	18,000

Specifications:

CONCRETE: Class I/II concrete with design strength of 4500 PSI at 28 days. Unit is of monolithic construction at floor and first stage of wall with sectional riser to required depth.

REINFORCEMENT: Grade 60 reinforced. Steel rebar conforming to ASTM A615 on required centers or equal.

HATCHWAY: Aluminum diamond plate cover with extruded aluminum frame furnished with drop handle, open door support and slam lock. (300 P.S.F. live load)

Notes:

The backflow assembly shall be factory assembled in vault & hydrostatically tested prior to delivery. Field excavation & preparation shall be complete prior to delivery. Pipe, valves and fittings of the assembly shall be approved by one or more of the following associations:

1. DOUBLE DETECTOR CHECK BACKFLOW ASSEMBLY

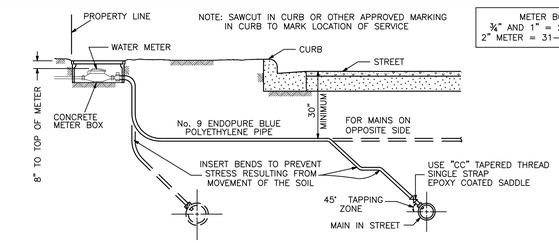

TYPICAL SECTION SERVICE LINE

METER BOX SIZE:
¾" AND 1" = 23" x 16" BOX
2" METER = 31-1/2" x 20" BOX

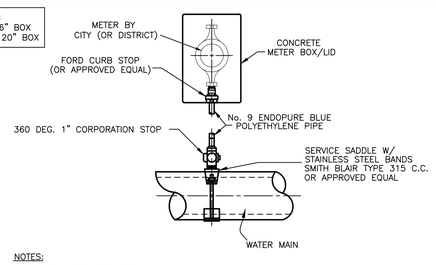

NOTES:

1. SINGLE WATER SERVICES ONLY.
2. FOR 3/4" AND 1" METERS, USE 1" No. 9 EDOPURE BLUE POLYETHYLENE PIPE FROM CORPORATION STOP TO METER.
3. FOR 2" METERS, USE 1" No. 9 EDOPURE BLUE POLYETHYLENE PIPE FROM CORPORATION STOP TO METER.
4. ALL SERVICES INSTALLED BY OPEN CUT METHOD SHALL BE ENCASED BY A MINIMUM OF 6" BANK SAND.
5. IN NEW DEVELOPMENTS, ALL RESIDENTIAL SERVICE LINES SHALL BE INSTALLED WITH INITIAL CONSTRUCTION AND SHALL BE MARKED WITH A 4"x4"x5'-0" TIMBER (PAINTED BLUE) AND EXTENDING TWO FEET (2') ABOVE FINISHED GRADE.
6. METER BOXES SHALL COMPLY WITH CITY OF RICHMOND REQUIREMENTS.
7. THE STANDARD RESIDENTIAL SERVICE LINE WILL BE ONE INCH, WITH A COMPRESSION (INLET) X F.I.P. (OUTLET) CURB STOP, IT MUST BE 360 DEGREE FULL PORT OPENING (REFERENCE MUELLER P-25172N). THE CURB STOP WILL BE SET IN THE BACK OF THE BOX TO ALLOW THE ENTIRE WATER METER TO FIT INSIDE.
8. WATER METER BOXES MUST NOT BE SET IN THE SIDEWALK PATH CENTERED BETWEEN THE SIDEWALK AND BACK OF CURB.
9. THE COMPRESSION CORPORATIONS FOR WATERLINE SERVICE SADDLES, WILL BE THE "CC" THREAD FOR ALL SIZES. THE PIPE FOR THE CORPORATION STOP WILL BE TAPPED ON A 45 DEGREE ANGLE.
10. THE STANDARD RESIDENTIAL SERVICE LINE WILL BE ONE INCH, WITH A COMPRESSION (INLET) X F.I.P. (OUTLET) CURB STOP, IT MUST BE 360 DEGREE FULL PORT OPENING (REFERENCE MUELLER P-25172N). THE CURB STOP WILL BE SET IN THE BACK OF THE BOX TO ALLOW THE ENTIRE WATER METER TO FIT INSIDE.

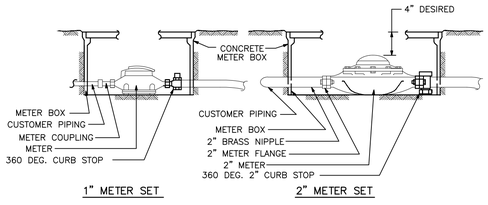

4. RESIDENTIAL WATER METER AND SERVICE LINE

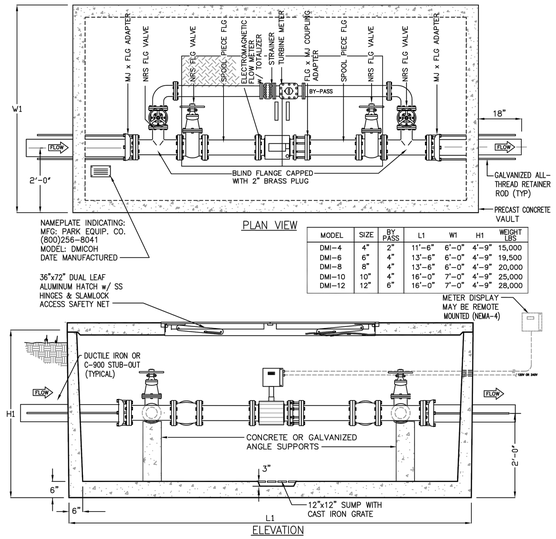

MODEL	SIZE	BY PASS	L1	W1	H1	WEIGHT LBS.
DMI-4	4"	2"	11'-6"	6'-0"	4'-9"	15,000
DMI-6	6"	4"	13'-6"	6'-0"	4'-9"	19,500
DMI-8	8"	4"	13'-6"	6'-0"	4'-9"	20,000
DMI-10	10"	4"	16'-0"	7'-0"	4'-9"	25,000
DMI-12	12"	6"	16'-0"	7'-0"	4'-9"	28,000

Specifications

Concrete: Class II concrete with design strength of 4500 psi at 28 days. Unit is of monolithic construction at floor and first stage of wall with sectional riser to required depth.

Reinforcement: Grade 60 reinforced. Steel rebar conforming to astm a615 on required centers or equal.

Hatchway: 1/4" aluminum diamond plate cover with extruded aluminum frame. Hatch to be furnished with 316 stainless steel snap lock & brass hinges.

Engineering data
The meter assembly shall be factory assembled in vault & hydrostatically tested prior to delivery. Field excavation & preparation shall be complete prior to delivery. Pipe, valves and fittings of the assembly shall be approved by the city. All assembly vaults shall be backfilled with cement stabilized sand. Cement stabilized sand backfill shall extend a minimum of six inches (6") from the outside wall of all structures. (2 sacks of cement per ton of sand.)

2. ELECTROMAGNETIC WATER METER WITH METERED BY-PASS

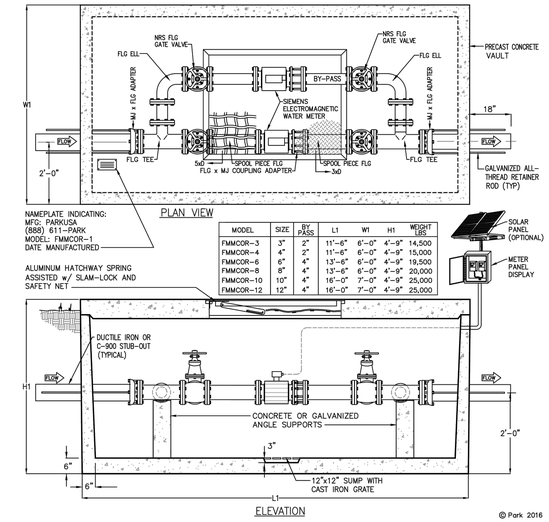

MODEL	SIZE	BY PASS	L1	W1	H1	WEIGHT LBS.
FMMCOR-3	3"	2"	11'-6"	6'-0"	4'-9"	14,500
FMMCOR-4	4"	2"	11'-6"	6'-0"	4'-9"	15,000
FMMCOR-6	6"	4"	13'-6"	6'-0"	4'-9"	19,500
FMMCOR-8	8"	4"	13'-6"	6'-0"	4'-9"	20,000
FMMCOR-10	10"	4"	16'-0"	7'-0"	4'-9"	25,000
FMMCOR-12	12"	4"	16'-0"	7'-0"	4'-9"	25,000

© Park 2016

Specifications

Concrete: Class I/II concrete with design strength of 4500 psi at 28 days. Unit is of monolithic construction at floor and first stage of wall with sectional riser to required depth.

Reinforcement: Grade 60 reinforced. Steel rebar conforming to astm a615 on required centers or equal.

Hatchway: 1/4" aluminum (300 psf), diamond plate, with 1/4" extrudeed aluminum frame. Hatch to be furnished with 316 stainless steel snap lock & brass hinges.

Engineering data
The meter assembly shall be factory assembled in vault & hydrostatically tested prior to delivery. Field excavation & preparation shall be complete prior to delivery. Pipe, valves and fittings of the assembly shall be approved by the city. All assembly vaults shall be backfilled with cement stabilized sand. Cement stabilized sand backfill shall extend a minimum of six inches (6") from the outside wall of all structures. (2 sacks of cement per ton of sand.)

3. FIRE/DOMESTIC WATER MAG METER ASSEMBLY 3" THRU 12"

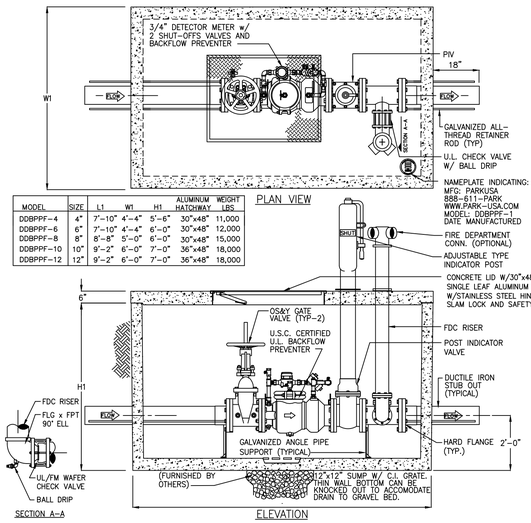

ALUMINUM WEIGHT					
MODEL	SIZE	L1	W1	H1	HATCHWAY LBS
DDBPPF-4	4"	7'-10"	4'-4"	5'-6"	30"x48" 11,000
DDBPPF-6	6"	7'-10"	4'-4"	6'-0"	30"x48" 12,000
DDBPPF-8	8"	8'-8"	5'-0"	6'-0"	30"x48" 15,000
DDBPPF-10	10"	9'-2"	6'-0"	7'-0"	36"x48" 18,000
DDBPPF-12	12"	9'-2"	6'-0"	7'-0"	36"x48" 18,000

Specifications:

CONCRETE: Class I/II concrete with design strength of 4500 PSI at 28 days. Unit is of monolithic construction at floor and first stage of wall with sectional riser to required depth.

REINFORCEMENT: Grade 60 reinforced. Steel rebar conforming to ASTM A615 on required centers or equal.

HATCHWAY: 1/4" Aluminum diamond plate cover with extruded aluminum frame. Hatch to be furnished with 316 stainless steel snap lock & brass hinges.

Notes:

Field excavation and preparation shall be completed prior to delivery of assembly. Use dimensional data as shown. Pipe, valves and fittings of the assembly are approved by one or more of the following associations:

5. DOUBLE DETECTOR CHECK BACKFLOW ASSEMBLY W/PIV & FDC

NO.	DATE	REVISIONS	APP.

CITY OF RICHMOND
STANDARD CONSTRUCTION DETAILS

WATER-2

SCALE		DESIGNED BY: LLT
HORIZONTAL	1" = NTS	DRAWN BY: TWB
VERTICAL	1" = NTS	CHECKED BY: CBA
		DATE: 3/22/19
		JOB NO:
		DWG. NO: R-3-19
		Sheet:

File: N:\Work\Data\Richmond\2019 COR STANDARDS\R-3-19 - Water.dwg
Layout Tab: R-3-17
Save date: Tuesday, March 19, 2019 9:28:39 AM Plot date: Tuesday, March 19, 2019 9:47:53 AM

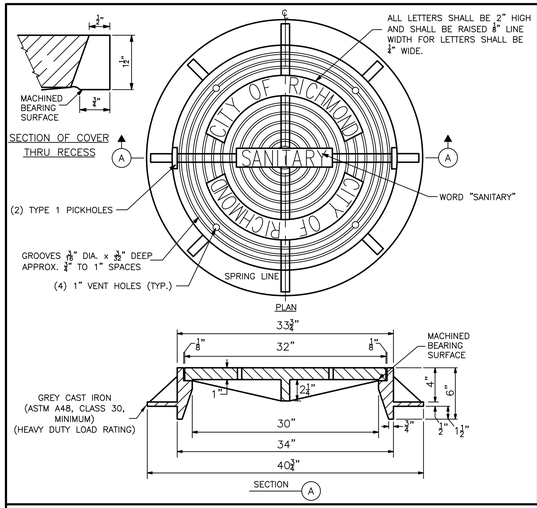

1. MANHOLE FRAME AND COVER

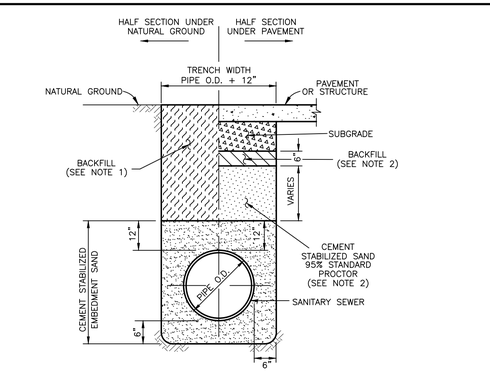

NOTES

1. BACKFILL SHALL BE NATIVE SOIL, FREE OF DEBRIS, PLACED IN LIFTS, 8" THICK OR LESS, COMPACTED TO 95% STANDARD PROCTOR DENSITY, (CONTRACTOR TO USE PROPER COMPACTION EQUIPMENT TO ACHIEVE DESIRED DENSITY.) EXCEPT AS REQUIRED BELOW.
2. BACKFILL UNDER AND WITHIN 3 FEET OF DRIVEWAYS AND PUBLIC STREETS SHALL BE CEMENT STABILIZED SAND (2 SACKS OF CEMENT PER TON OF SAND), EXCEPT THE TOP 6" SHALL BE NATIVE SOIL, FREE OF DEBRIS. ALL BACKFILL UNDER PAVING SHALL BE COMPACTED TO 95% STANDARD PROCTOR DENSITY.
3. TRENCH SHORING, IN ACCORDANCE WITH OSHA, SHALL BE INSTALLED AS REQUIRED.

2. SANITARY SEWER BEDDING

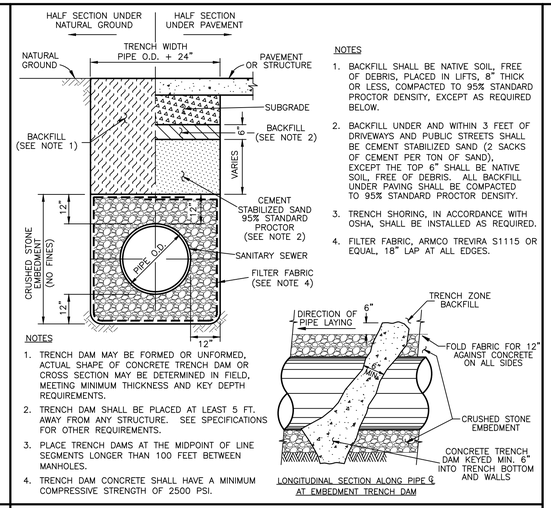

NOTES

1. TRENCH DAM MAY BE FORMED OR UNFORMED, ACTUAL SHAPE OF CONCRETE TRENCH DAM OR CROSS SECTION MAY BE DETERMINED IN FIELD, MEETING MINIMUM THICKNESS AND KEY DEPTH REQUIREMENTS.
2. TRENCH DAM SHALL BE PLACED AT LEAST 5 FT. AWAY FROM ANY STRUCTURE. SEE SPECIFICATIONS FOR OTHER REQUIREMENTS.
3. PLACE TRENCH DAMS AT THE MIDPOINT OF LINE SEGMENTS LONGER THAN 100 FEET BETWEEN MANHOLES.
4. TRENCH DAM CONCRETE SHALL HAVE A MINIMUM COMPRESSIVE STRENGTH OF 2500 PSI.

3. SANITARY SEWER BEDDING FOR WET CONDITIONS

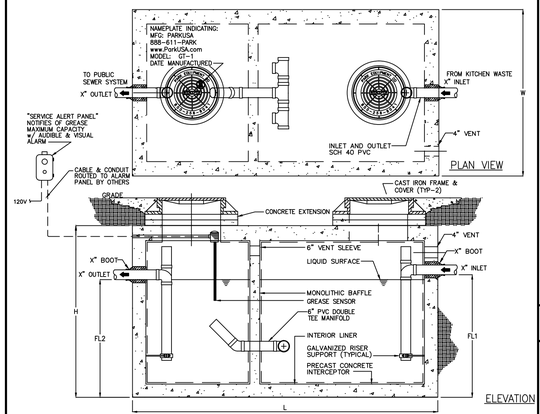

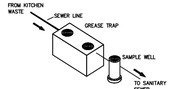

TYPICAL APPLICATIONS INCLUDE COMMERCIAL AND INDUSTRIAL FOOD SERVICE KITCHENS WHERE EXCESSIVE GREASE MAY INTERFERE WITH THE PROPER DRAINAGE OF THE SEWER SYSTEM. THE GREASE INTERCEPTOR IS GENERALLY BURIED BELOW GRADE FOR GRAVITY FLOW SEWER SYSTEMS. A SAMPLE WELL IS UTILIZED ON THE OUTLET SIDE FOR SAMPLING BY THE LOCAL WATER AUTHORITY.

GREASE INTERCEPTOR SCHEDULE								
MODEL NO.	CAPACITY USGal	GREASE CAP. (LBS)	EMPTY WT (LBS)	LENGTH L	WIDTH W	HEIGHT H	INLET FL1	OUTLET FL2
GT-500	500	1,200	9,500	7'-10"	4'-4"	4'-6"	3'-3"	3'-0"
GT-750	750	1,700	9,900	7'-10"	4'-4"	5'-0"	4'-3"	4'-2"
GT-1000	1,000	2,300	13,350	8'-8"	5'-0"	6'-0"	4'-9"	4'-6"
GT-1250	1,250	2,900	14,850	9'-2"	5'-8"	6'-0"	4'-9"	4'-6"
GT-1500	1,500	3,500	16,050	9'-2"	5'-8"	7'-0"	5'-9"	5'-6"
GT-2000	2,000	4,600	21,250	9'-0"	6'-0"	8'-0"	6'-9"	6'-6"
GT-2500	2,500	5,700	27,050	13'-0"	7'-0"	7'-0"	5'-9"	5'-6"
GT-3000	3,000	6,900	33,150	13'-0"	7'-0"	8'-0"	6'-9"	6'-6"
GT-3500	3,500	8,000	38,550	13'-0"	7'-0"	8'-6"	7'-3"	7'-0"
GT-4000	4,000	9,300	38,100	16'-0"	8'-6"	7'-0"	5'-9"	5'-6"

OTHER SIZES ARE AVAILABLE. CONTACT US FOR MORE INFORMATION

SPECIFICATIONS

CONCRETE : CLASS I/II CONCRETE WITH DESIGN STRENGTH OF 4500 PSI AT 28 DAYS. UNIT IS OF MONOLITHIC CONSTRUCTION AT FLOOR, FIRST STAGE OF WALL AND BAFFLE WITH SECTIONAL RISER TO REQUIRED DEPTH. (MONOLITHIC BAFFLE REQUIRED, SLIDE-IN TYPE IS NOT ACCEPTABLE)

REINFORCEMENT: GRADE 60 REINFORCED WITH STEEL REBAR CONFORMING TO ASTM A615 ON REQUIRED CENTERS OR EQUAL.

C.I. CASTINGS: MANHOLE FRAMES, COVERS OR GRATES ARE MANUFACTURED OF GREY CAST IRON CONFORMING TO ASTM A48 CLASS 30. MANHOLE SHALL BE NOMINAL 24 INCH DIAMETER AND BE TRAFFIC DUTY.

ENGINEERING DATA

THE GREASE INTERCEPTOR IS STRUCTURALLY & HYDRAULICALLY ENGINEERED TO CONFORM TO UPC/IPC AND REGIONAL PLUMBING CODES RECOMMENDED IN MOST CITIES. CONSULT WITH LOCAL AUTHORITIES FOR SPECIFIC APPLICATION REQUIREMENTS.

SHOP DRAWINGS SHALL INCLUDE COMPLETE STRUCTURAL & BOUYANCY CALCULATIONS CERTIFIED BY A LICENSED PROFESSIONAL ENGINEER UPON REQUEST.

CONSULT WITH PARK EQUIPMENT COMPANY FOR EXACT EXCAVATION DIMENSIONS & SHIPPING INFORMATION.

4. GREASE TRAP

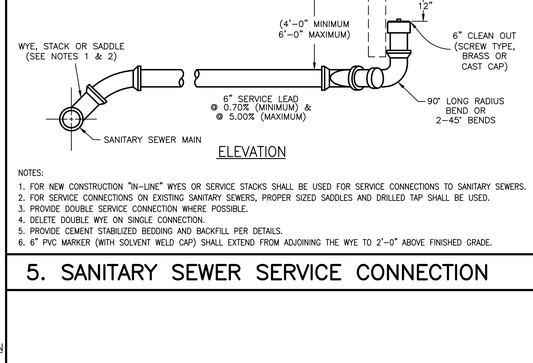

NOTES:

1. FOR NEW CONSTRUCTION "IN-LINE" WYES OR SERVICE STACKS SHALL BE USED FOR SERVICE CONNECTIONS TO SANITARY SEWERS.
2. FOR SERVICE CONNECTIONS ON EXISTING SANITARY SEWERS, PROPER SIZED SADDLES AND DRILLED TAP SHALL BE USED.
3. PROVIDE DOUBLE SERVICE CONNECTION WHERE POSSIBLE.
4. DELETE DOUBLE WYE ON SINGLE CONNECTION.
5. PROVIDE CEMENT STABILIZED BEDDING AND BACKFILL PER DETAILS.
6. 6" PVC MARKER (WITH SOLVENT WELD CAP) SHALL EXTEND FROM ADJOINING THE WYE TO 2'-0" ABOVE FINISHED GRADE.

5. SANITARY SEWER SERVICE CONNECTION

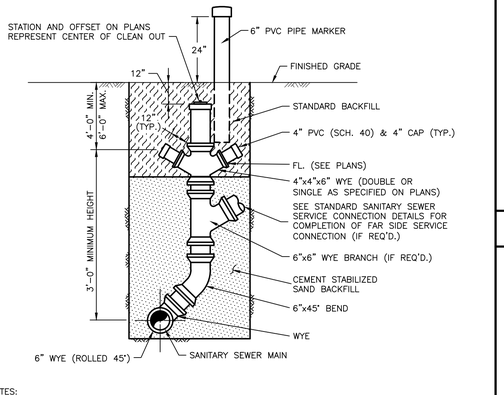

NOTES:

1. ALL STACK CONNECTIONS SHALL BE "IN-LINE" FITTINGS.
2. NO STACKS TO BE CONSTRUCTED ON EXISTING SANITARY SEWER LINES; LINES GREATER THAN 12' DEEP OR IN WET TRENCH CONDITIONS.
3. ALL FITTINGS TO BE PVC, SDR-26.
4. 6" PVC MARKER (WITH SOLVENT WELD CAP) SHALL EXTEND FROM ADJOINING THE WYE TO 2'-0" ABOVE FINISHED GRADE.

6. SANITARY SEWER STACK

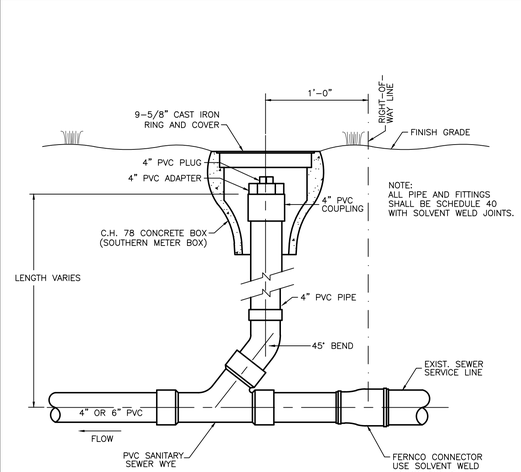

7. SERVICE LINE CLEANOUT ASSEMBLY

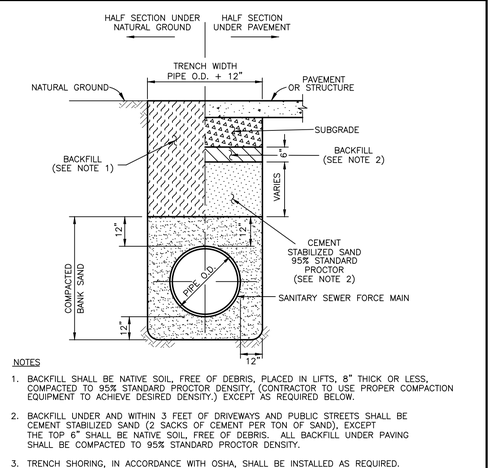

NOTES

1. BACKFILL SHALL BE NATIVE SOIL, FREE OF DEBRIS, PLACED IN LIFTS, 8" THICK OR LESS, COMPACTED TO 95% STANDARD PROCTOR DENSITY, (CONTRACTOR TO USE PROPER COMPACTION EQUIPMENT TO ACHIEVE DESIRED DENSITY.) EXCEPT AS REQUIRED BELOW.
2. BACKFILL UNDER AND WITHIN 3 FEET OF DRIVEWAYS AND PUBLIC STREETS SHALL BE CEMENT STABILIZED SAND (2 SACKS OF CEMENT PER TON OF SAND), EXCEPT THE TOP 6" SHALL BE NATIVE SOIL, FREE OF DEBRIS. ALL BACKFILL UNDER PAVING SHALL BE COMPACTED TO 95% STANDARD PROCTOR DENSITY.
3. TRENCH SHORING, IN ACCORDANCE WITH OSHA, SHALL BE INSTALLED AS REQUIRED.
4. ALL EXCAVATED MATERIAL WITH A P.I. OF 12 OR LESS MAY BE USED AS BACKFILL WITH FIELD APPROVAL BY THE CITY.

8. SANITARY SEWER FORCE MAIN BEDDING

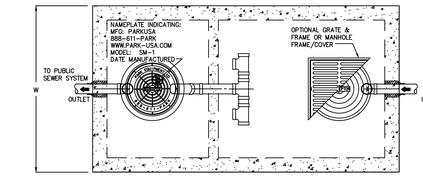

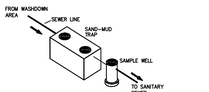

TYPICAL APPLICATIONS INCLUDE COMMERCIAL AND INDUSTRIAL LAUNDRY FACILITIES WHERE EXCESSIVE SAND & MUD MAY INTERFERE WITH THE PROPER DRAINAGE OF THE SEWER SYSTEM. THE SAND-MUD INTERCEPTOR IS GENERALLY BURIED BELOW GRADE FOR GRAVITY FLOW SEWER SYSTEMS. A SAMPLE WELL IS UTILIZED ON THE OUTLET SIDE FOR SAMPLING BY THE LOCAL WATER AUTHORITY.

SAND-MUD INTERCEPTOR SCHEDULE								
MODEL NO.	CAPACITY USGal	EMPTY WT. (LBS)	LENGTH L	WIDTH W	HEIGHT H	INLET FL1	OUTLET FL2
SM-500	500	9,500	7'-10"	4'-4"	4'-6"	3'-3"	3'-0"
SM-750	750	9,900	7'-10"	4'-4"	5'-0"	4'-3"	4'-2"
SM-1000	1,000	13,350	8'-8"	5'-0"	6'-0"	4'-9"	4'-6"
SM-1250	1,250	14,850	9'-2"	5'-8"	6'-0"	4'-9"	4'-6"
SM-1500	1,500	16,050	9'-2"	5'-8"	7'-0"	5'-9"	5'-6"
SM-2000	2,000	21,250	9'-0"	6'-0"	8'-0"	6'-9"	6'-6"
SM-2500	2,500	27,050	13'-0"	7'-0"	7'-0"	5'-9"	5'-6"
SM-3000	3,000	33,150	13'-0"	7'-0"	8'-0"	6'-9"	6'-6"
SM-3500	3,500	38,550	13'-0"	7'-0"	8'-6"	7'-3"	7'-0"
SM-4000	4,000	38,100	16'-0"	8'-6"	7'-0"	5'-9"	5'-6"

OTHER SIZES ARE AVAILABLE. CONTACT US FOR MORE INFORMATION

SPECIFICATIONS

CONCRETE: CLASS I/II CONCRETE WITH DESIGN STRENGTH OF 4500 PSI AT 28 DAYS., UNIT IS OF MONOLITHIC CONSTRUCTION AT FLOOR, FIRST STAGE OF WALL AND BAFFLE WITH SECTIONAL RISER TO REQUIRED DEPTH. (MONOLITHIC BAFFLE REQUIRED, SLIDE-IN TYPE IS NOT ACCEPTABLE)

REINFORCEMENT: GRADE 60 REINFORCED WITH STEEL REBAR CONFORMING TO ASTM A615 ON REQUIRED CENTERS OR EQUAL.

C.I. CASTINGS: MANHOLE FRAMES, COVERS OR GRATES ARE MANUFACTURED OF GREY CAST IRON CONFORMING TO ASTM A48 CLASS 30. MANHOLE SHALL BE NOMINAL 24 INCH DIAMETER AND BE TRAFFIC DUTY.

ENGINEERING DATA

THE SAND & MUD INTERCEPTOR IS STRUCTURALLY & HYDRAULICALLY ENGINEERED TO CONFORM TO REGIONAL PLUMBING CODES RECOMMENDED IN MOST CITIES. CONSULT WITH LOCAL AUTHORITIES FOR SPECIFIC APPLICATION REQUIREMENTS.

SHOP DRAWINGS SHALL INCLUDE COMPLETE STRUCTURAL & BOUYANCY CALCULATIONS CERTIFIED BY A LICENSED PROFESSIONAL ENGINEER UPON REQUEST.

CONSULT WITH PARK ENVIRONMENTAL FOR EXACT EXCAVATION DIMENSIONS & SHIPPING INFORMATION.

9. SAND MUD INTERCEPTOR

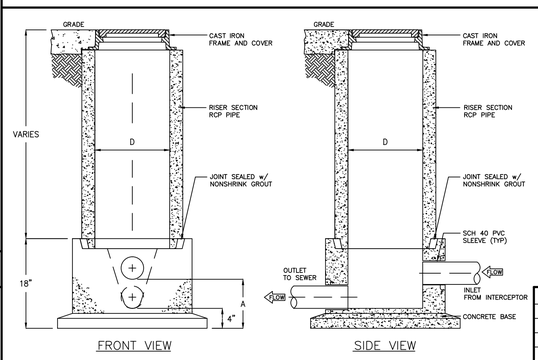

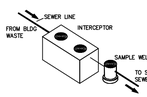

MODEL	DIAMETER "D"	IN & OUT PIPE SIZE	WIDTH "W"	"A"
SWB-154	15"	4"	24"	11"
SWB-156	15"	6"	24"	9"
SWB-184	18"	4"	28"	11"
SWB-186	18"	6"	28"	9"
SWB-244	24"	4"	34"	11"
SWB-246	24"	6"	34"	9"

NOTES

1. SAMPLING WELL MUST BE INSTALLED UNDER A SEPARATE PLUMBING PERMIT.
2. USE 15" T&G R.C.P. FOR INSTALLATION 6'-0" DEEP AND LESS.
3. USE 24" T&G R.C.P. FOR INSTALLATION GREATER THAN 6'-0" DEEP. (STD RING AND M.H. COVER REQUIRED).
4. SAMPLING WELL MUST BE SET IN A CIRCULAR OR SQUARE CONCRETE PAD (1'-0" GREATER THAN OUTSIDE DIAMETER OF PIPE).
5. INSIDE INSTALLATION NOT PERMITTED, WHERE OUTSIDE INSTALLATION IS POSSIBLE.
6. INSTALLATION INSIDE BLDG MUST BE POURED IN PLACE (15"MIN) NO CONCRETE PIPE IS PERMITTED, (AIR-TIGHT COVER REQUIRED).
7. LAWN INSTALLATION MUST BE 4" ABOVE FINISHED GRADE.
8. DRIVE & SIDEWALK INSTALLATION MUST BE BROUGHT TO FINISHED GRADE.
9. TO BE INSTALLED ON PRIVATE PROPERTY, IN AN ACCESSIBLE LOCATION TO CITY PERSONNEL.

SPECIFICATIONS

CONCRETE: Class I/II concrete with of design strength of 4500 PSI at 28 days. Unit is of monolithic construction at floor and first stage of wall with sectional riser to required depth.

C.I. CASTINGS: Cast iron frames and grates are manufactured of grey cast iron conforming to ASTM A48-76 Class 30, Heavy-Duty AASHTO H-20

10. SAMPLING WELL

NO.	DATE	REVISIONS	APP.

CITY OF RICHMOND
STANDARD CONSTRUCTION DETAILS

SANITARY-1

SCALE		DESIGNED BY:	LLT
HORIZONTAL	1" = NTS	DRAWN BY:	TWB
VERTICAL	1" = NTS	CHECKED BY:	CBA
		DATE:	3/22/19
		JOB NO:	
		DWG. NO:	R-4-19
		Sheet:	

File Name:W:\Data\Richmond\2019 COR STANDARD\R-4-19 - Sanitary.dwg
Layout Tab:R-4-17 SAN
Save date:Tuesday, March 19, 2019 9:34:44 AM Plot date:Tuesday, March 19, 2019 9:47:58 AM

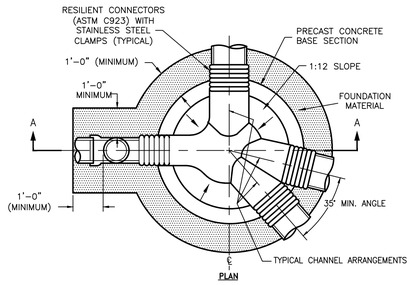

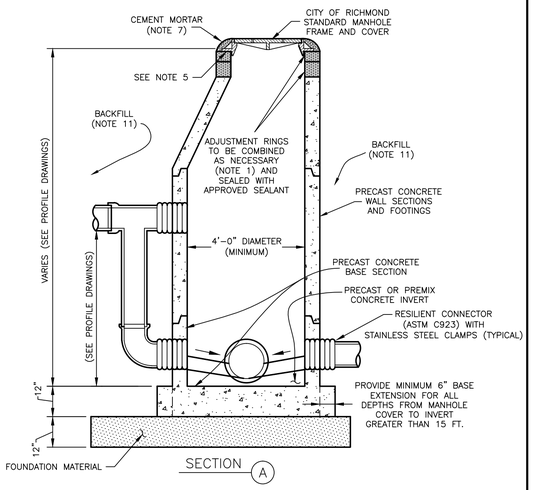

NOTES:

1. PRECAST CONCRETE RINGS SHALL BE PROVIDED FOR A COMBINED ADJUSTMENT HEIGHT OF AT LEAST 6". THE TOTAL HEIGHT OF THE ADJUSTMENT RINGS SHALL NOT EXCEED 12".
2. MANHOLE WALL THICKNESS FOR DEPTH EXCEEDING 12'-0" SHALL BE DETERMINED TO MEET AASHTO H-20 LOADING AND SOIL CONDITIONS OR AS OTHERWISE REQUIRED. MINIMUM THICKNESS 5".
3. MANHOLE DROP AND INTERSECTING PIPES SHALL BE INSTALLED WHEN CALLED FOR IN PLAN AND PROFILE DRAWING AND WHEN THE DROP ON INCOMING PIPE IS GREATER THAN 24".
4. NO INTERNAL DROPS PERMITTED, UNLESS APPROVED BY CITY.
5. SEAT MANHOLE FRAME USING AN APPROVED SEALANT.
6. ECCENTRIC PRECAST CONCRETE MANHOLE RISER SHALL BE USED, FOR DEPTHS GREATER THAN 8'.
7. OMIT CEMENT MORTAR WHEN MANHOLE IS LOCATED IN PAVED AREAS.
8. MINIMUM STEEL REINFORCING IN THE PRECAST CONCRETE BASE SHALL BE #5 @ 8" CENTERS EACH WAY.
9. PRECAST CONCRETE MANHOLES TO MEET ASTM C-478, CURRENT.
10. ALL JOINTS SHALL BE SEALED WITH RUBBER GASKETS (ASTM C443) OR APPROVED EQUAL.
11. BASE SHALL INCLUDE A 12" THICK CEMENT STABILIZED SAND BASE BENEATH THE STRUCTURE. ALTERNATE: USE CRUSHED STONE AND FILTER FABRIC IN WET TRENCH CONDITIONS.
12. BACKFILL AROUND MANHOLE & DROP CONNECTION WITH 2 SACKS OF CEMENT PER TON OF SAND (100 P.S.I. MINIMUM).
13. USE STANDARD CAST IRON FRAME AND COVER WITH THE WORDS "SANITARY – CITY OF RICHMOND".
14. MINIMUM 4000 P.S.I. CONCRETE TO BE USED FOR CAST-IN-PLACE (C.I.P.) CONCRETE BASE.
15. GROUT INSIDE AND OUTSIDE OF EXTENSION RING(S) AND FRAME.
16. ALL INTERIOR SURFACES SHALL BE COATED WITH IPAGARD EPOXY, THANECOAT FE100 OR APPROVED EQUAL, APPLIED IN ACCORDANCE WITH THE MANUFACTURER'S RECOMMENDATION (40 MIL MINIMUM THICKNESS)
17. MANHOLES SHALL BE CONSTRUCTED USING PRECAST REINFORCED CONCRETE MANHOLE SECTIONS, CONE AND BOTTOM. BRICK WILL NOT BE ALLOWED.
18. MANHOLE INVERT TO BE CUT INTO OR ADD TO MANHOLE BASE WHEN A SERVICE CONNECTION IS ADDED.

1. SANITARY SEWER MANHOLE

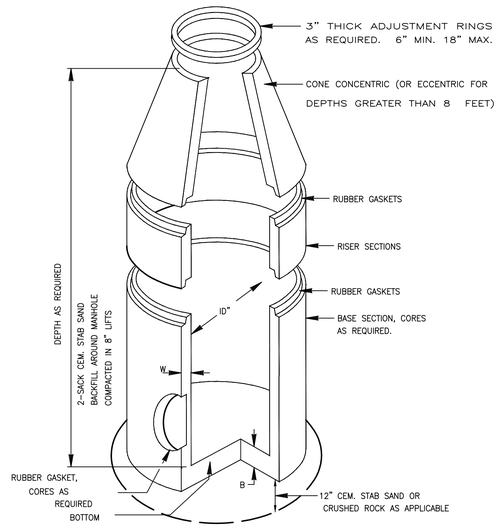

NOTES

1. LIFTING INSERTS AS REQUIRED.
2. ALL JOINTS SHALL BE SEALED WITH APPROVED RUBBER GASKET.
3. STRUCTURE TO BE PLACED ON 12" STABILIZED BASE.
4. C.S.S. SHALL BE BROUGHT TO WITHIN 2-FT OF TOP OF MANHOLE.
5. PRE-CAST MANHOLE SHALL BE IN COMPLIANCE WITH APPROVED PRODUCT LIST.
6. THANE COAT SHALL BE IN COMPLIANCE WITH APPROVED PRODUCT LIST.
7. INVERTS SHALL COMPLY WITH C.O.M.C., INFRASTRUCTURE DESIGN MANUAL SPECIFICATIONS.
8. INFLOW PROTECTORS REQUIRED ON ALL SANITARY MANHOLES.
9. REFER TO SANITARY MANHOLE LIDS, C.S.S. NOTES, MODIFIED BEDDING DETAILS AND NOTES.

2. PRECAST SANITARY MANHOLE

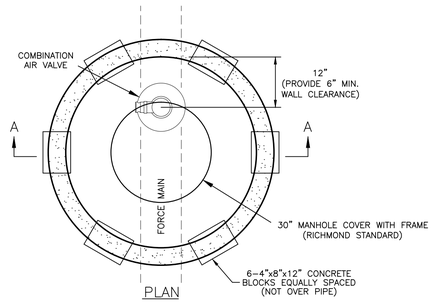

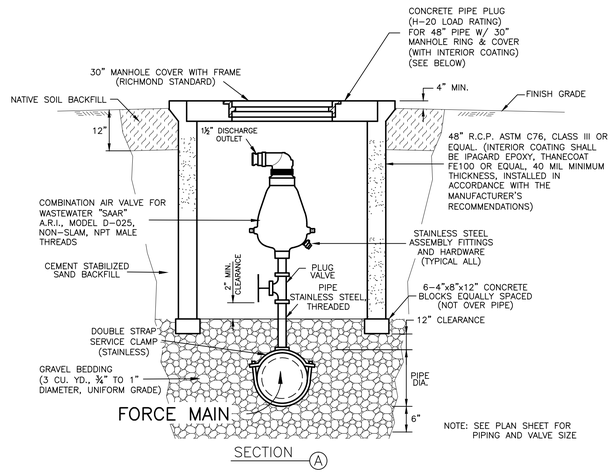

3. SEWERAGE AIR RELEASE VALVE MANHOLE

NO.	DATE	REVISIONS	APP.

CITY OF RICHMOND
STANDARD CONSTRUCTION DETAILS

SANITARY-2

SCALE		DESIGNED BY:	LLT
HORIZONTAL	1" = NTS	DRAWN BY:	TWB
VERTICAL	1" = NTS	CHECKED BY:	CBA
		DATE:	3/22/19
		JOB NO:	
		DWG. NO:	R-5-19
		Sheet:	

File: N:\eng\h\Details\Richmond\2019 COR STANDARD\R-5-19 - Sanitary.dwg
Layout Tab: R-5-19 SAN
Save date: Tuesday, March 19, 2019 9:35:08 AM Plot date: Tuesday, March 19, 2019 9:47:59 AM

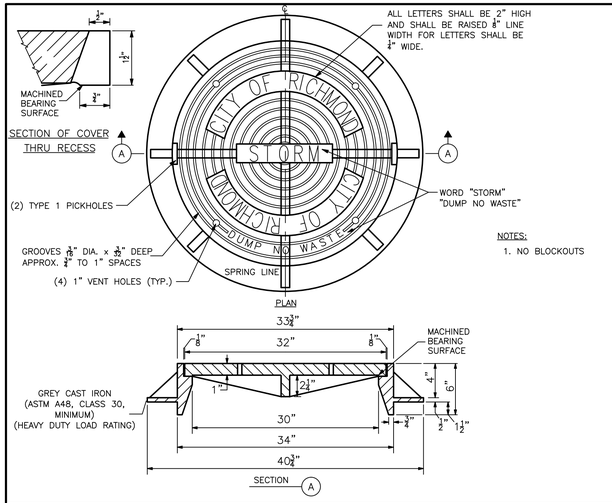

1. MANHOLE AND INLET FRAME AND COVER

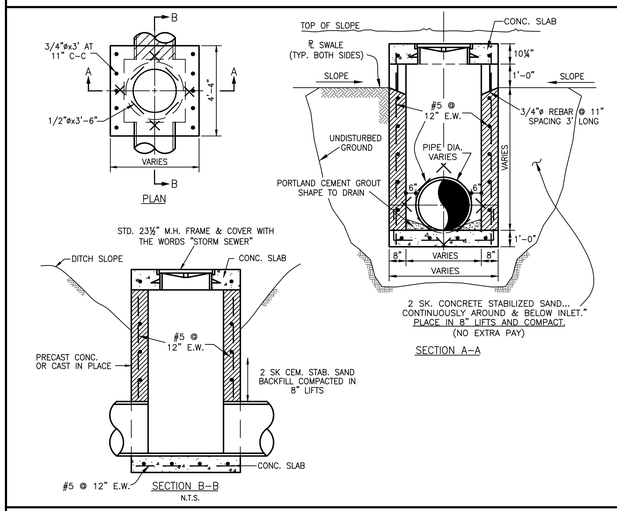

2. TYPE 'E' INLET

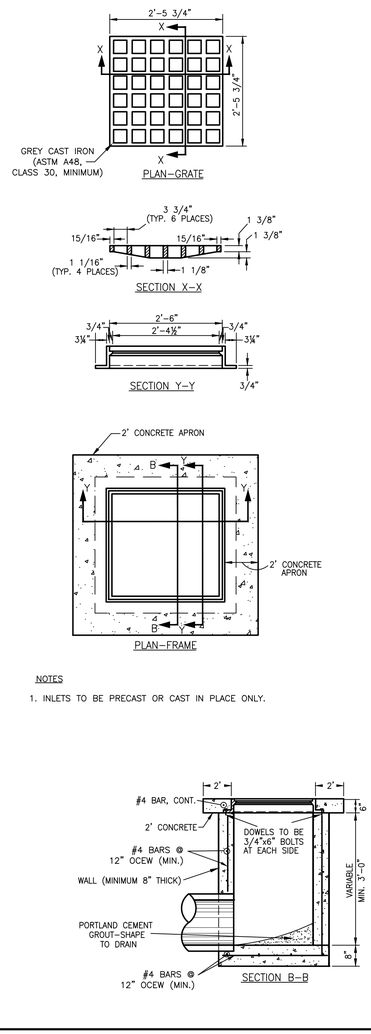

3. TYPE 'A' INLET

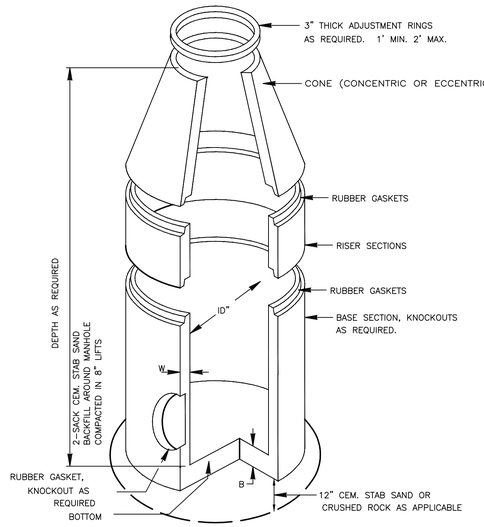

SPECIFICATIONS:

CONCRETE: CLASS 1 CONCRETE WITH A DESIGN STRENGTH OF 4500 PSI AT 28 DAYS. RATES FOR H-20 LOADING.

REINFORCEMENT: STRUCTURAL REINFORCEMENT CONFORMING TO ASTM-C-478.

C.I. CASTINGS: CAST IRON FRAMES AND GRATES ARE MANUFACTURED OF GREY CAST IRON CONFORMING TO ASTM A48-76 CLASS 35.

DIMENSIONS AND WEIGHTS			
I.D. SIZE (in)	W (in)	B (in)	RISER WT/LF (lb)
48	5	6	868
60	6	8	1300
72	7	8	1811
96	9	8	3090

NOTES

1. LIFTING INSERTS AS REQUIRED.
2. ALL JOINTS SHALL BE SEALED WITH APPROVED RUBBER GASKET
3. STRUCTURE TO BE PLACED ON 12" STABILIZED BASE.
4. C.S.S. SHALL BE BROUGHT TO WITHIN 2-FT OF TOP OF MANHOLE.

4. PRECAST CONCRETE MANHOLE

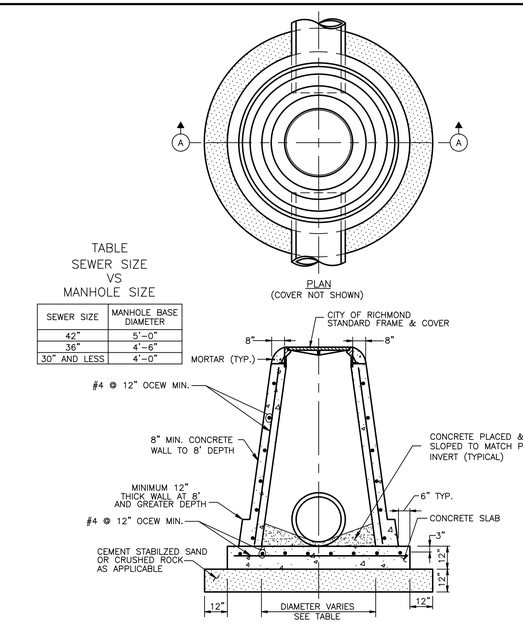

SEWER SIZE	MANHOLE BASE DIAMETER
42"	5'-0"
36"	4'-6"
30" AND LESS	4'-0"

NOTES:

1. ALL BACKFILL WITHIN 2 FEET OF THE MANHOLE AND WITHIN 4 FEET OF THE TOP RIM ELEVATION SHALL BE CEMENT STABILIZED SAND (SEE BEDDING DETAIL).
2. BACKFILL UNDER AND WITHIN 3 FEET OF PAVING SHALL MEET THE BACKFILL REQUIREMENTS FOR STORM SEWERS.
3. MANHOLE TO BE PRECAST OR CAST IN PLACE. BRICK MAY ONLY BE USED WITH CITY APPROVAL.

5. MANHOLE TYPE "C" FOR 42" DIA. R.C.P. AND SMALLER

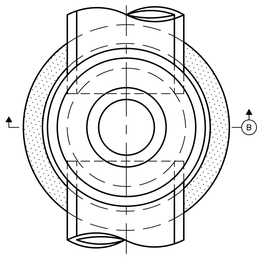

GENERAL CONSTRUCTION NOTES:

1. ALL CAST CONCRETE BASES SHALL HAVE #4 REBAR @ 12" C-C EW.
2. CONCRETE SHALL BE 3500 PSI MIN.
3. USE C.S.S. BEDDING AS PER DETAILS 2 SK, COMPACTED 8" LIFTS (MAX.), TO 95% STANDARD.

NOTE:

STORM MANHOLES AND INLETS SHALL BE PRECAST CONCRETE. POURED IN PLACE, REINFORCED CONCRETE STRUCTURES MAY BE SUBSTITUTED WHEN THE PROPOSED CONSTRUCTION DETAIL IS SUBMITTED BY THE DESIGN ENGINEER FOR APPROVAL BY THE CITY.

A 4000 psi COLLAR IS REQUIRED TO BRIDGE A 3" OR LARGER GAP, DEFFLECTION OR CONNECTION OF DIFFERENT SIZE PIPES. THE COLLAR WILL BE 6" THICK 2 FT WIDE MIN. WITH #4 REBAR DOWELED INTO THE PIPE AND STRUCTURE. FOR A PIPE CONNECTION TO A MANHOLE OR BOX, THE COLLAR WILL BE 1 FOOT WIDE ON THE OUTSIDE OF THE STRUCTURE AND SEALED SMOOTHLY ON THE INSIDE OF THE STRUCTURE WITH NON-SHRINK GROUT.

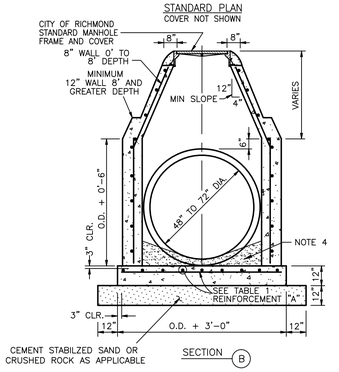

TABLE 1

DATA FOR VARIOUS PIPE DIAMETERS

PIPE DIA. (INCHES)	MIN. DEPTH	REINFORCEMENT ("A")	REINFORCEMENT ("B")
48"	8'-0"	#5 @ 12 E.W.	2-#6
54"	9'-4"	#5 @ 10 E.W.	2-#6
60"	10'-7"	#5 @ 8 E.W.	2-#7
66"	11'-10"	#5 @ 7 E.W.	2-#7
72"	13'-2"	#5 @ 6 E.W.	2-#7

NOTES:

1. ALL BACKFILL WITHIN 2 FEET OF THE MANHOLE AND WITHIN 4 FEET OF THE TOP RIM ELEVATION SHALL BE CEMENT STABILIZED BACKFILL (SEE BEDDING DETAIL).
2. BACKFILL UNDER AND WITHIN 3 FEET OF PAVING SHALL MEET THE BACKFILL REQUIREMENTS FOR STORM SEWERS.
3. PORTLAND CEMENT GROUT TO MATCH INVERT OF PIPE.
4. CAST IN PLACE ONLY. BRICK MAY ONLY BE USED WITH CITY APPROVAL.

7. TYPE "C" MANHOLE FOR 48" TO 72" DIA. R.C.P.

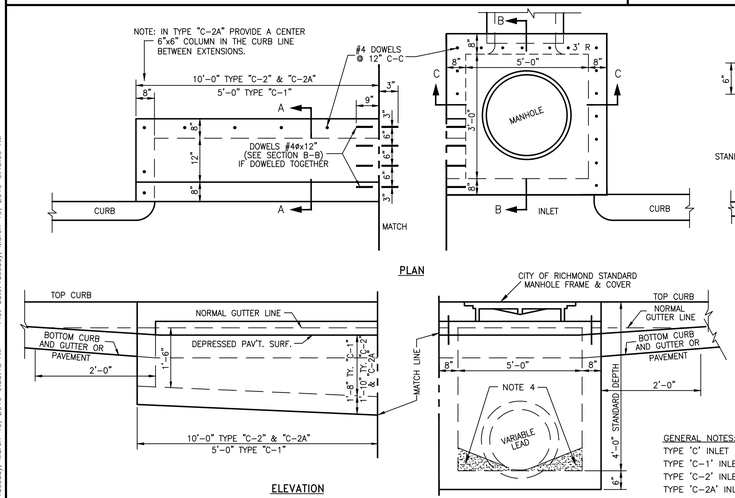

GENERAL NOTES:

TYPE 'C' INLET - WITH NO EXTENSION
TYPE 'C-1' INLET - WITH ONE EXTENSION (5'-0" LONG)
TYPE 'C-2' INLET - WITH ONE EXTENSION (10'-0" LONG)
TYPE 'C-2A' INLET - WITH DOUBLE EXTENSION (10'-0" LONG)

6. TYPE 'C' INLET

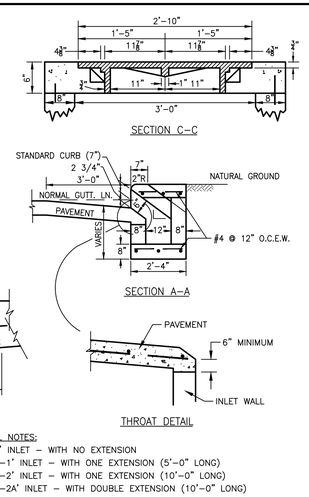

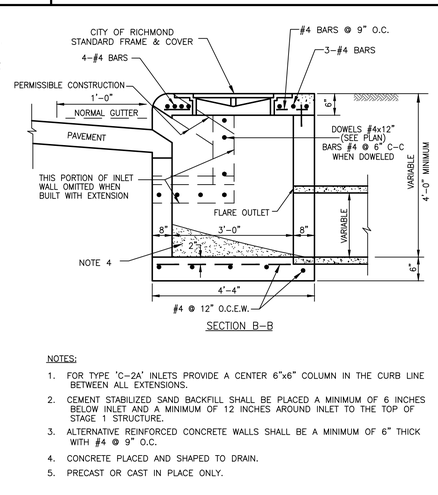

NOTES:

1. FOR TYPE 'C-2A' INLETS PROVIDE A CENTER 6"x6" COLUMN IN THE CURB LINE BETWEEN ALL EXTENSIONS.
2. CEMENT STABILIZED SAND BACKFILL SHALL BE PLACED A MINIMUM OF 6 INCHES BELOW INLET AND A MINIMUM OF 12 INCHES AROUND INLET TO THE TOP OF STAGE 1 STRUCTURE.
3. ALTERNATIVE REINFORCED CONCRETE WALLS SHALL BE A MINIMUM OF 6" THICK WITH #4 @ 9" O.C.
4. CONCRETE PLACED AND SHAPED TO DRAIN.
5. PRECAST OR CAST IN PLACE ONLY.

NO.	DATE	REVISIONS	APP.

CITY OF RICHMOND
STANDARD CONSTRUCTION DETAILS

STORM SEWER-1

SCALE		DESIGNED BY: LLT
HORIZONTAL	1" = NTS	DRAWN BY: TWB
VERTICAL	1" = NTS	CHECKED BY: CBA
		DATE: 3/22/19
		JOB NO:
		DWG. NO:
		R-6-19
		Sheet:

File Name=N:\Design\Richmond\2019 CDS STANDARD\R-6-19 - Storm.dwg
Layout Tab=R-6-17 Storm
Save date=Tuesday, March 19, 2019 9:35:48 AM Plot date=Tuesday, March 19, 2019 9:48:09 AM

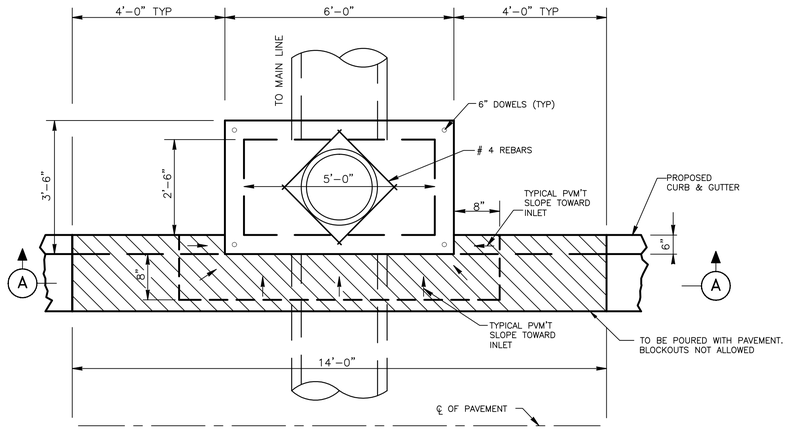

PLAN

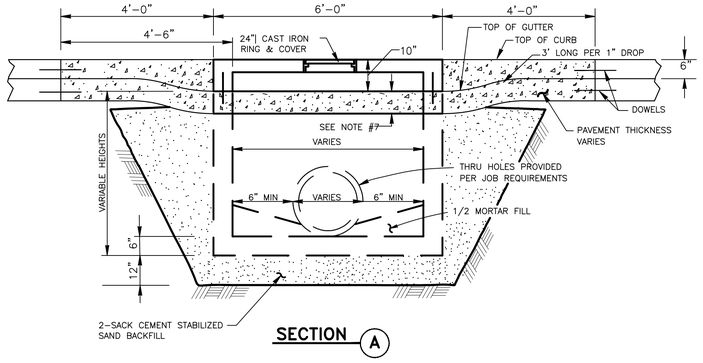

SECTION A

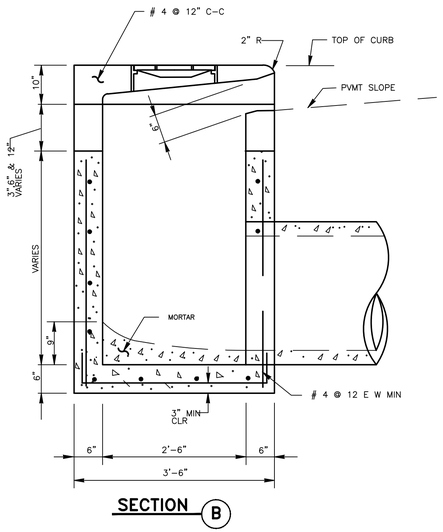

SECTION B

NOTES:

1. INLET WALLS MAY BE EXTENDED USING PRECAST RISER SECTION.
2. INLET TOPS MUST BE SECURED TO THE INLET WALL USING #6 DOWELS DRILLED AND GROUTED A MINIMUM DEPTH OF 5" INTO THE INLET WALL.
3. INLET BACKFILL SHALL BE CEMENT STABILIZED SAND TO THE TOP OF INLET FIRST STAGE.
4. GRADE 60 REINFORCED. #4 STEEL REBAR TO CONFORM TO ASTM A615 ON REQUIRED CENTERS OR EQUAL.
5. PRECAST INLET MUST BE CONSTRUCTED TO SPECIFICATIONS REQUIRED BY APPROVED DRAWINGS. (SEE GENERAL NOTES)
6. TOPS POURED-IN-PLACE REQUIRE #4 REBAR @ 12" C-C EACH WAY, 3,500 PSI CONCRETE MINIMUM AND 3" THICK MINIMUM.
7. PAVEMENT DEPTH AT INLET SHALL BE EQUAL TO OR GREATER THAN REQUIRED PAVEMENT DEPTH.
8. DEPRESS

1. TYPE "H-2" PRECAST INLET

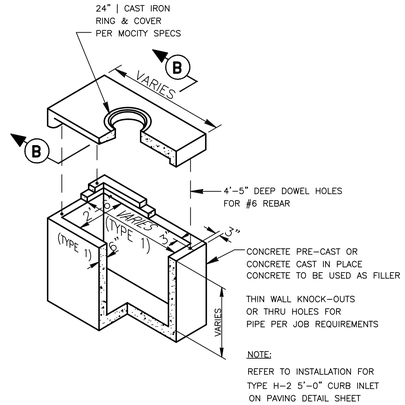

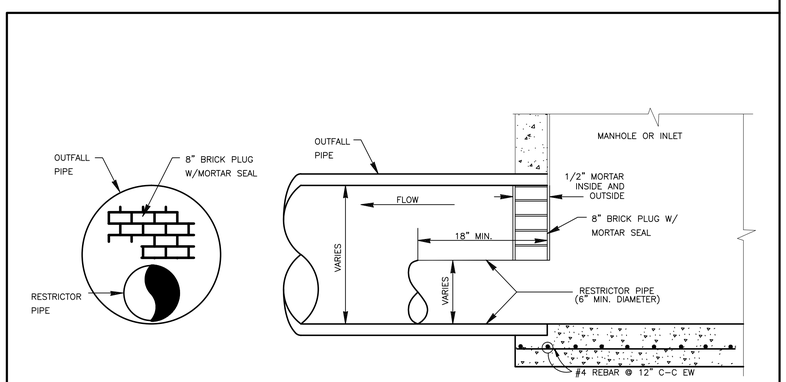

2. STORM SEWER CHOKE OUTFALL RESTRICTOR

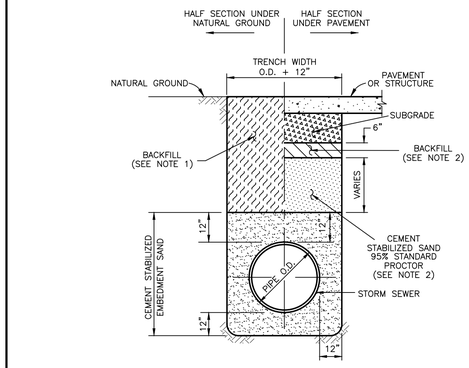

NOTES

1. BACKFILL SHALL BE NATIVE SOIL, FREE OF DEBRIS, PLACED IN LIFTS, 8" THICK OR LESS, COMPACTED TO 95% STANDARD PROCTOR DENSITY, EXCEPT AS REQUIRED BELOW.
2. BACKFILL UNDER AND WITHIN 3 FEET OF DRIVEWAYS AND PUBLIC STREETS SHALL BE CEMENT STABILIZED SAND (2 SACKS OF CEMENT PER TON OF SAND), EXCEPT THE TOP 6" SHALL BE NATIVE SOIL, FREE OF DEBRIS. ALL BACKFILL UNDER PAVING SHALL BE COMPACTED TO 95% STANDARD PROCTOR DENSITY.
3. TRENCH SHORING, IN ACCORDANCE WITH OSHA, SHALL BE INSTALLED AS REQUIRED.

3. STORM SEWER BEDDING

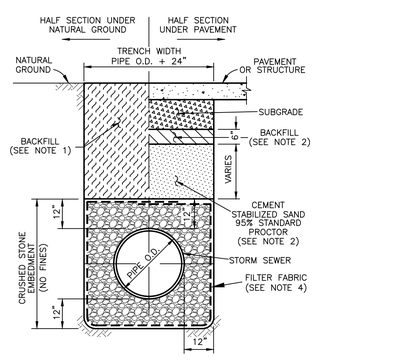

NOTES

1. BACKFILL SHALL BE NATIVE SOIL, FREE OF DEBRIS, PLACED IN LIFTS, 8" THICK OR LESS, COMPACTED TO 95% STANDARD PROCTOR DENSITY, EXCEPT AS REQUIRED BELOW.
2. BACKFILL UNDER AND WITHIN 3 FEET OF DRIVEWAYS AND PUBLIC STREETS SHALL BE CEMENT STABILIZED SAND (2 SACKS OF CEMENT PER TON OF SAND), EXCEPT THE TOP 6" SHALL BE NATIVE SOIL, FREE OF DEBRIS. ALL BACKFILL UNDER PAVING SHALL BE COMPACTED TO 95% STANDARD PROCTOR DENSITY.
3. TRENCH SHORING, IN ACCORDANCE WITH OSHA, SHALL BE INSTALLED AS REQUIRED.
4. FILTER FABRIC, ARMCO TREVIRA S1115 OR EQUAL, 18" LAP AT ALL EDGES.

4. STORM SEWER BEDDING FOR WET CONDITIONS

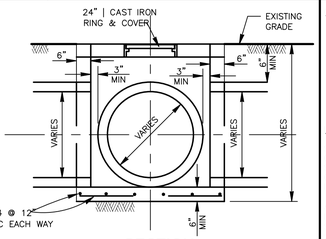

SECTION A

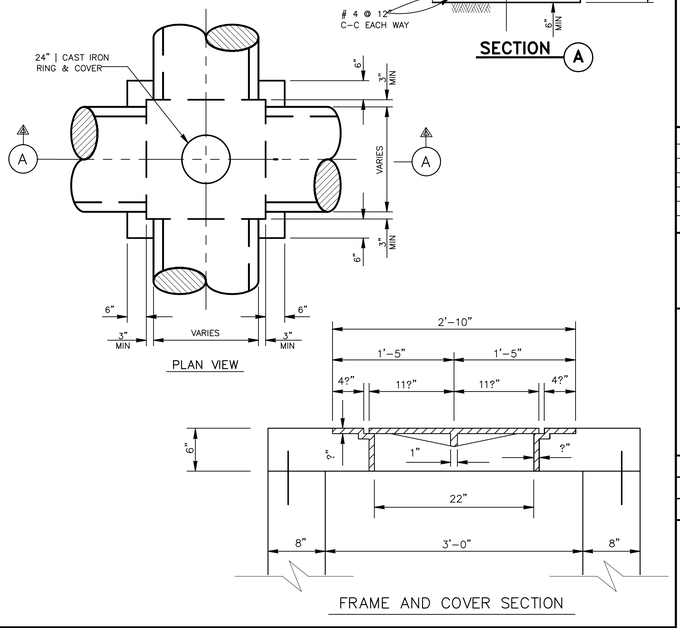

5. JUNCTION BOX

GENERAL CONSTRUCTION NOTES:

1. ALL CAST CONCRETE BASES SHALL HAVE #4 REBAR @ 12" C-C EW.
2. CONCRETE SHALL BE 3500 PSI MIN.
3. USE C.S.S. BEDDING AS PER DETAILS 2 SK, COMPACTED 8" LIFTS (MAX.), TO 95% STANDARD.

NOTE:

STORM MANHOLES AND INLETS SHALL BE PRECAST CONCRETE. POURED IN PLACE, REINFORCED CONCRETE STRUCTURES MAY BE SUBSTITUTED WHEN THE PROPOSED CONSTRUCTION DETAIL IS SUBMITTED BY THE DESIGN ENGINEER FOR APPROVAL BY THE CITY.

A 4000 psi COLLAR IS REQUIRED TO BRIDGE A 3" OR LARGER GAP, DEFFLECTION OR CONNECTION OF DIFFERENT SIZE PIPES. THE COLLAR WILL BE 6" THICK 2 FT WIDE MIN. WITH #4 REBAR DOWELED INTO THE PIPE AND STRUCTURE. FOR A PIPE CONNECTION TO A MANHOLE OR BOX, THE COLLAR WILL BE 1 FOOT WIDE ON THE OUTSIDE OF THE STRUCTURE AND SEALED SMOOTHLY ON THE INSIDE OF THE STRUCTURE WITH NON-SHRINK GROUT.

NO.	DATE	REVISIONS	APP.

CITY OF RICHMOND
STANDARD CONSTRUCTION DETAILS

STORM SEWER-2

SCALE		DESIGNED BY:	LLT
HORIZONTAL	1" = NTS	DRAWN BY:	TWB
VERTICAL	1" = NTS	CHECKED BY:	CBA
		DATE:	3/22/19
		JOB NO:	
		DWG. NO:	

R-7-19

Sheet:

File Name:N:\Depts\Richmond\2019 CDR STANDARD\R-7-19 - Storm.dwg
Layout Tab:R-7-19 Storm
Save date:Tuesday, March 19, 2019 9:46:17 AM
Plot date:Tuesday, March 19, 2019 9:48:11 AM

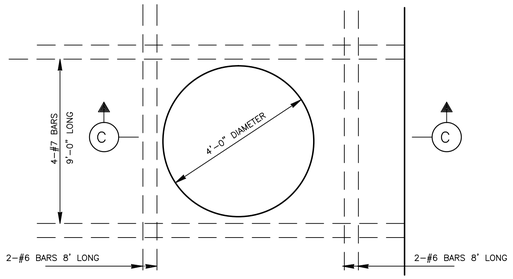

STANDARD TYPE "E" INLET MAY BE USED AT TOP OF MANHOLE.

PLAN
N.T.S.

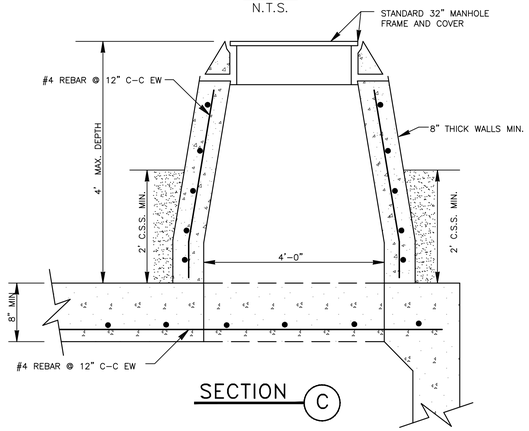

NOTES

1. MANHOLE TO BE PRECAST OR CAST IN PLACE ONLY.

1. MANHOLE FOR BOX SEWER

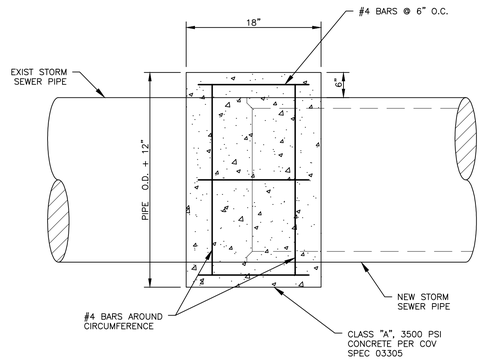

NOTES:
1. ANGLE OF PIPE NOT TO EXCEED 22½°. IF GREATER, INSTALL JUNCTION BOX.
2. AT THE CONNECTION TO A MANHOLE OR INLET, IF THE GAP IS 3" OR LARGER, A COLLAR IS REQUIRED. THE INSIDE SHALL BE SEALED WITH NON-SHRINK GROUT.

2. CONCRETE COLLAR CONNECTION

GENERAL CONSTRUCTION NOTES:

1. ALL CAST CONCRETE BASES SHALL HAVE #4 REBAR @ 12" C-C EW.
2. CONCRETE SHALL BE 3500 PSI MIN.
3. USE C.S.S. BEDDING AS PER DETAILS 2 SK, COMPACTED 8" LIFTS (MAX.), TO 95% STANDARD.

NOTE:

STORM MANHOLES AND INLETS SHALL BE PRECAST CONCRETE. POURED IN PLACE, REINFORCED CONCRETE STRUCTURES MAY BE SUBSTITUTED WHEN THE PROPOSED CONSTRUCTION DETAIL IS SUBMITTED BY THE DESIGN ENGINEER FOR APPROVAL BY THE CITY.

A 4000 psi COLLAR IS REQUIRED TO BRIDGE A 3" OR LARGER GAP, DEFFLECTION OR CONNECTION OF DIFFERENT SIZE PIPES. THE COLLAR WILL BE 6" THICK 2 FT WIDE MIN. WITH #4 REBAR DOWELED INTO THE PIPE AND STRUCTURE. FOR A PIPE CONNECTION TO A MANHOLE OR BOX, THE COLLAR WILL BE 1 FOOT WIDE ON THE OUTSIDE OF THE STRUCTURE AND SEALED SMOOTHLY ON THE INSIDE OF THE STRUCTURE WITH NON-SHRINK GROUT.

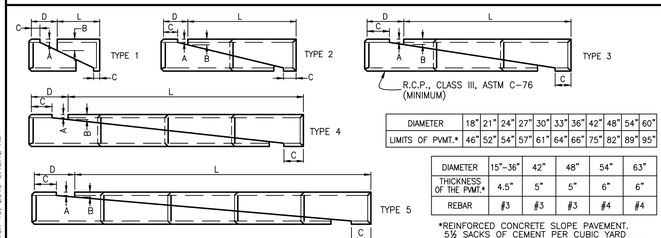

DIAMETER	18"	21"	24"	27"	30"	33"	36"	42"	48"	54"	60"
LIMITS OF PVMT.*	46"	52"	54"	57"	61"	64"	66"	75"	82"	89"	95"

DIAMETER	15"-36"	42"	48"	54"	63"
THICKNESS OF THE PVMT.*	4.5"	5"	5"	6"	6"
REBAR	#3	#3	#3	#4	#4

*REINFORCED CONCRETE SLOPE PAVEMENT. 5½ SACKS OF CEMENT PER CUBIC YARD (3500 P.S.I. @ 28 DAYS). REBAR @ 12" O.C.

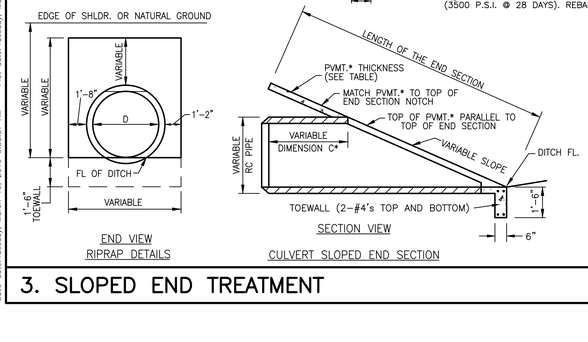

DIA.	WALL	O.D.	SLOPE	PIPE LGTH	TYPE	A INCH	B INCH	C INCH	D INCH	L	LENGTH END SEC FT.	PVMT. DNT. C.Y.**
24"	3"	30"	3:1	2'-6"	2	3	9	36	54	7'-6"	11.27	0.57
			4:1	2'-6"	2	3	9	24	48	5'-3"	12.33	0.56
			6:1	3'-6"	3	3	9	36	72	12'-2"	18.23	0.74
27"	3"	33"	3:1	2'-6"	2	3	9	31	49	7'-10"	11.6	0.6
			4:1	2'-7"	2	3	9	36	60	10'-0"	14.6	0.89
			6:1	3'-7"	3	3	9	54	90	15'-0"	21.54	0.91
30"	3"	37"	3:1	2'-6"	2	3	9	27	45	8'-5"	12.12	0.63
			4:1	2'-7"	2	3	9	30	54	10'-6"	15.29	0.72
			6:1	3'-7"	3	3	9	45	81	15'-9"	22.55	0.95
3"	3"	40"	3:1	2'-6"	2	3	9	22	40	6'-7"	12.65	0.66
			4:1	2'-7"	2	3	9	24	48	11'-0"	15.97	0.76
			6:1	3'-7"	3	3	9	36	72	16'-6"	23.57	0.98
36"	4"	44"	3:1	2'-7"	2	4	10	36	54	10'-8"	14.75	0.8
			4:1	3'-6"	3	4	10	26	60	13'-0"	18.21	0.88
			6:1	4'-6"	4	4	10	36	72	18'-0"	25.36	1.03
42"	4"	51"	3:1	2'-7"	2	4	10	27	45	11'-3"	15.81	0.96
			4:1	3'-7"	3	4	10	51	75	16'-5"	21.9	1.26
			6:1	4'-7"	4	4	10	54	90	22'-6"	30.41	1.57
48"	5"	58"	3:1	3'-6"	3	5	11	36	54	13'-6"	18.44	1.28
			4:1	3'-7"	3	5	11	39	63	17'-3"	23.27	1.49
			6:1	4'-7"	4	5	11	36	72	24'-0"	32.44	1.82
54"	5"	65"	3:1	3'-6"	3	5	11	27	45	14'-3"	19.5	1.52
			4:1	4'-6"	4	5	11	36	60	19'-0"	25.43	2.19
			6:1	5'-7"	5	5	11	63	99	29'-3"	38.27	2.57
60"	6"	72"	3:1	3'-7"	3	6	12	45	63	17'-3"	22.64	1.96
			4:1	4'-7"	4	6	12	60	84	23'-0"	29.98	2.46
			6:1	5'-7"	5	6	12	45	81	30'-9"	40.28	2.65

**PVMT. QUANTITY FOR ONE END SECTION

3. SLOPED END TREATMENT

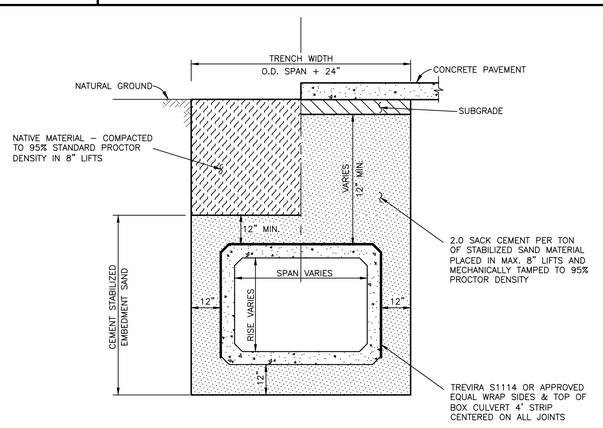

NOTES:

1. 2.0 – SACK CEMENT PER TON OF STABILIZED SAND PLACED BEFORE PIPE IS PLACED.

4. REINFORCED CONCRETE BOX BEDDING DETAIL

NO.	DATE	REVISIONS	APP.

CITY OF RICHMOND
STANDARD CONSTRUCTION DETAILS

STORM SEWER-3

SCALE		DESIGNED BY:	LLT
HORIZONTAL	1" = NTS	DRAWN BY:	TWB
VERTICAL	1" = NTS	CHECKED BY:	CBA
		DATE:	3/22/19
		JOB NO:	
		DWG. NO:	R-8-19
		Sheet:	

File: N:\Work\Orders\Richmond\2019 COR STANDARDS\R-8-19 - Storm.dwg
Layout Tab: R-8-17 Storm
Save date: Tuesday, March 19, 2019 9:38:37 AM Plot date: Tuesday, March 19, 2019 9:48:12 AM

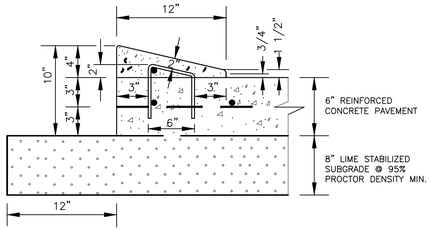

NOTES:

1.) #3 RE-BAR STIRRUPS TO BE PLACED AT INTERVALS OF 2' (FT) C-C.

2.) #4 RE-BAR LONGITUDINAL SHALL BE TIED TO EACH STIRRUP

3.) MOUNTABLE CURB ONLY ALLOWED ON ≤ 41' (FT), UNDIVIDED, RESIDENTIAL ROADWAYS WITHIN SUBDIVISIONS.

4"x12" MOUNTABLE CONCRETE CURB AND TRANSITION CURB NOTES:

1. 6-INCH CONCRETE CURB TO BE CONSTRUCTED ON ALL ESPLANADES, ISLANDS AND NON-RESIDENTIAL STREETS. RESIDENTIAL STREETS MAY BE CONSTRUCTED WITH EITHER 6-INCH CONCRETE CURB OR 4-INCH x 12-INCH CONCRETE CURB AS NOTED ON PLANS.
2. ALL 4-INCH x 12-INCH CONCRETE CURBS TO BE POURED SEPARATE FROM PROPOSED CONCRETE PAVEMENT.
3. TRANSITIONS FROM 6-INCH CONCRETE CURB TO 4-INCH x 12-INCH CONCRETE CURB TO BE ACCOMPLISHED WITHIN 5 FEET (TYP.), UNLESS OTHERWISE SHOWN. REINFORCING STEEL AS SHOWN IN "4-INCH x 12-INCH TRANSITION CURB" DETAIL IS TO BE INSTALLED.

NOTES FOR DETAILS 1 & 2

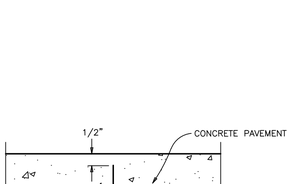

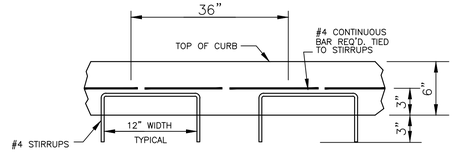

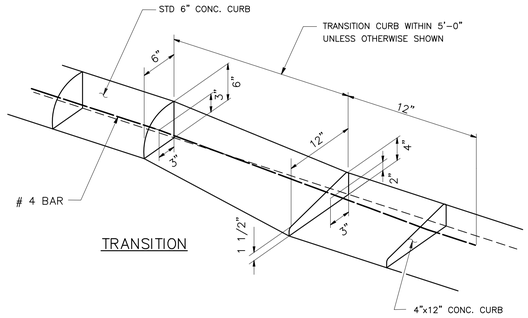

TRANSITION

1. 4"X12" MOUNTABLE CONCRETE CURB

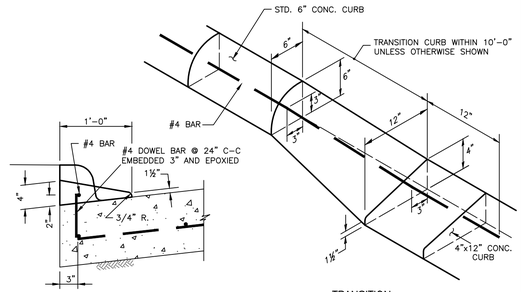

TRANSITION

NOTES:

1. 6" CONCRETE CURB TO BE CONSTRUCTED ON ALL ESPLANADES, ISLANDS AND NON-RESIDENTIAL STREETS. RESIDENTIAL STREETS MAY BE CONSTRUCTED WITH EITHER 6" CONCRETE CURB OR 4"x12" CONCRETE CURB AS NOTED ON DRAWINGS.
2. ALL 4"x12" CONCRETE CURBS TO BE POURED SEPARATE FROM PROPOSED CONCRETE PAVEMENT.
3. TRANSITIONS FROM 6" CONCRETE CURB TO 4"x12" CONCRETE CURB TO BE ACCOMPLISHED WITHIN 10 FEET, UNLESS OTHERWISE SHOWN. IF THIS 10 FOOT TRANSITION CURB IS NOT POURED MONOLITHICALLY WITH THE PAVEMENT, THEN REINFORCING STEEL AS SHOWN ABOVE IN TYPICAL DETAIL 4"x12" TRANSITION CURB IS TO BE INSTALLED.
4. ADJUST PAVEMENT ELEVATION AND SLOPE TO ASSURE PROPER DRAINAGE THROUGH THE TRANSITION.

2. 4"X12" TRANSITION CURB

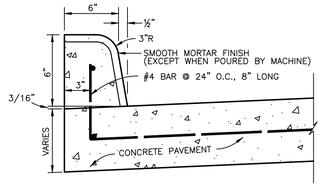

NOTES:

1. MORTAR FINISH NOT REQUIRED WHEN CURB IS POURED BY A MACHINE, BUT CURB SHALL HAVE THE SAME OUTSIDE DIMENSIONS.
2. WHEN CONCRETE CURB IS TO BE PLACED ON EXISTING CONCRETE BASE, USE #4 DEFORMED BARS, 8" LONG, 24" O.C., DOWELLED, AND SET IN QUICK SETTING CEMENT GROUT.
3. REDWOOD EXPANSION JOINTS SHALL BE INSTALLED AT ALL PAVEMENT EXPANSION JOINTS.

3. TYPICAL CONCRETE CURB REINFORCING

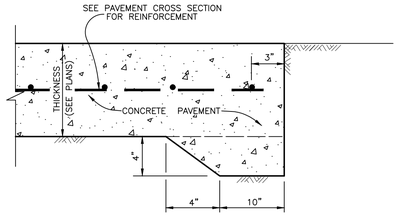

4. TYPICAL CURB TRANSITION

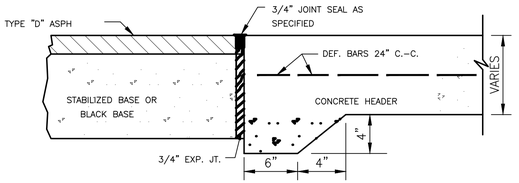

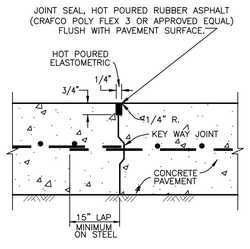

CONSTRUCTION

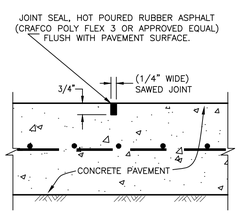

NOTES:

1. SAWCUT SHALL BE COMPLETED IN 6 TO 12 HOURS AFTER PLACEMENT OF CONCRETE.
2. MAXIMUM SPACING OF LATERAL SAWED JOINTS SHALL BE 20'0".

SAWED

5. 4"X12" TRANSITION CURB

6. CONCRETE CURB

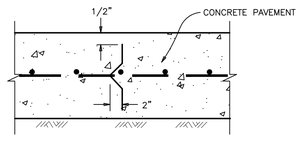

NOTES:

1. THE LOCATION OF DEFORMED STRIPS MAY BE VARIED, WITH THE APPROVAL OF THE CITY. MAXIMUM LONGITUDINAL SPACING FOR DEFORMED STRIPS SHALL BE 14'-0". DEFORMED METAL STRIPS SHALL BE PLACED VERTICALLY ALONG A STRAIGHT ALIGNMENT.

7. PAVEMENT HEADER

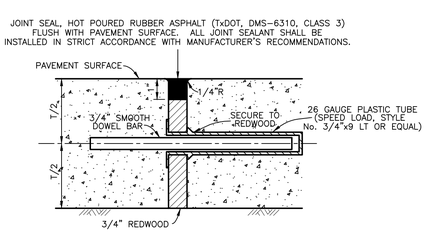

NOTES:

1. EXPANSION JOINT TO BE PLACED AT THE END OF EACH CURB RADIUS AND SPACED A MAXIMUM OF 60'-0" APART.
2. STAKES FOR TRANSVERSE JOINTS SHALL NOT BE PLACED CLOSER THAN 6" TO A LONGITUDINAL JOINT. THE TOP OF EACH STAKE SHALL NOT BE LESS THAN 2" BELOW THE FINISHED SURFACE.
3. DOWEL SHALL BE SECURED IN A HORIZONTAL ALIGNMENT PRIOR TO POURING CONCRETE.
4. INSTALL BACKER RODS (TxDOT, DMS-6310) IN ACCORDANCE WITH SEALANT MANUFACTURER'S RECOMMENDATIONS.
5. NO EXPANSION JOINT SHALL BE INSTALLED WITHIN TWO FEET (2') FROM AN INLET OPENING.

8. PAVEMENT HEADER FOR CONNECTING CONCRETE TO ASPHALT

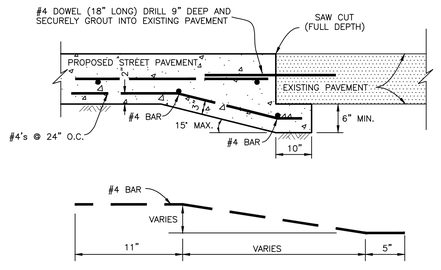

UNDERCUT BAR LAYOUT

NOTES:

1. PAVEMENT UNDERCUT TO BE USED WHEN NO SUBGRADE STABILIZATION EXIST UNDER EXISTING PAVEMENT.

9. PAVEMENT JOINTS

10. DEFORMED METAL STRIP

11. DOWEL TYPE EXPANSION JOINT

12. PAVEMENT UNDERCUT

NO.	DATE	REVISIONS	APP.

CITY OF RICHMOND
STANDARD CONSTRUCTION DETAILS

PAVING-1

SCALE		DESIGNED BY:	LLT
HORIZONTAL	1" = NTS	DRAWN BY:	TWB
VERTICAL	1" = NTS	CHECKED BY:	CBA
		DATE:	3/22/19
		JOB NO:	
		DWG. NO:	R-9-19
		Sheet:	

File Name=N:\Data\Richmond\2019 CDR STANDARDS\R-9-19 - Pave.dwg
Layout Tab:R-9-17 - Pave
Save date:Tuesday, March 19, 2019 9:39:06 AM
Plot date:Tuesday, March 19, 2019 9:48:13 AM

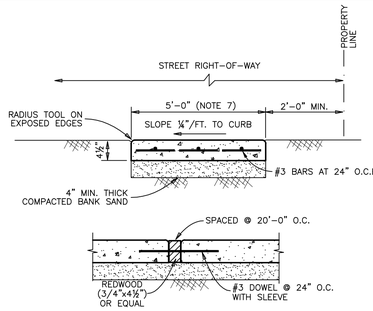

EXPANSION JOINT

NOTES:

1. CONCRETE SHALL CONTAIN A MINIMUM OF FIVE AND ONE HALF (5½) SACKS OF CEMENT PER CUBIC YARD OF CONCRETE, 3500 P.S.I. @ 28 DAYS.
2. TIE TO EXISTING STEEL IN CONNECTION TO EXISTING WALK.
3. FINISH CONCRETE IN ACCORDANCE WITH CITY REQUIREMENTS – LIGHT BROOM FINISH.
4. SCORED CONTRACTION JOINTS AT 4'–0" O.C. EXPANSION JOINT EVERY 20'–0" O.C.
5. MAXIMUM SLOPE ALONG LENGTH OF SIDEWALK AT ANY LOCATION IS 5%. MAXIMUM SLOPE ACROSS SIDEWALK AT ANY LOCATION IS 2%.
6. SIDEWALK THICKNESS AND REINFORCEMENT SHALL MATCH DRIVEWAY REQUIREMENTS WITHIN THE LIMITS OF A DRIVEWAY.
7. WIDTH MAY BE REDUCED TO 4'–0" IF A SIDEWALK PEDESTRIAN PLAN IS INCLUDED IN THE PLANS SHOWING 5'–0"x5'–0" PASSING AREAS AT A MAXIMUM SPACING OF 200 FEET.

1. CONCRETE SIDEWALK

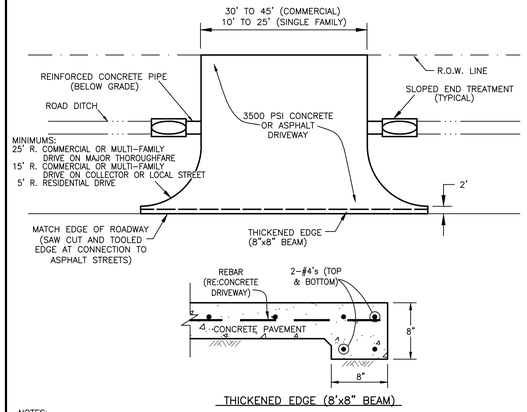

THICKENED EDGE (8'x8" BEAM)

NOTES:

1. CULVERT DIAMETER SHALL BE A MINIMUM OF 15" (IN CITY ONLY) OR 24" (IN ETJ).
2. SLOPED END TREATMENTS SHALL BE INSTALLED ON ALL CULVERTS. SLOPED END TREATMENTS ON CULVERTS WITHIN COLLECTOR OR RESIDENTIAL STREET RIGHT-OF-WAYS SHALL HAVE A MINIMUM SLOPE OF 3 TO 1. SLOPED END TREATMENTS ON CULVERTS WITHIN MAJOR THOROUGHFARE RIGHT-OF-WAYS SHALL HAVE A MINIMUM SLOPE OF 6 TO 1.
3. USE C/S #1.

5. DRIVEWAY WITH OPEN DITCH

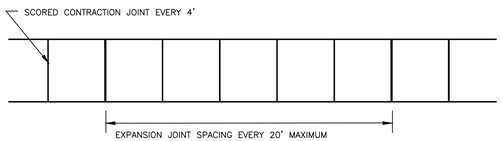

EXPANSION JOINT: 3/4" THICK CLEAR HEART REDWOOD WITH DOWELS

2. SIDEWALK JOINT DETAILS

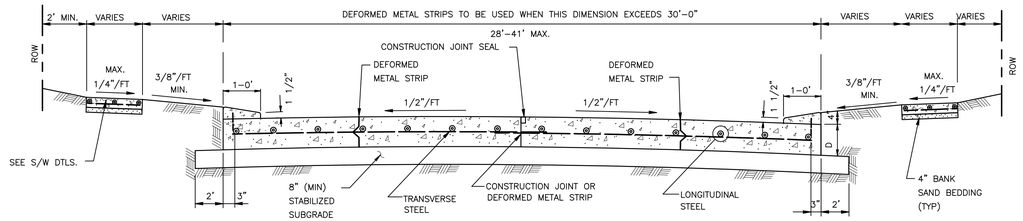

* NOTE: SEE 4" x 12" MOUNTABLE CURB DETAIL

3. TYPICAL SINGLE ROADWAY SECTION FOR CONCRETE PAVEMENT WITH 4"X12" CURB

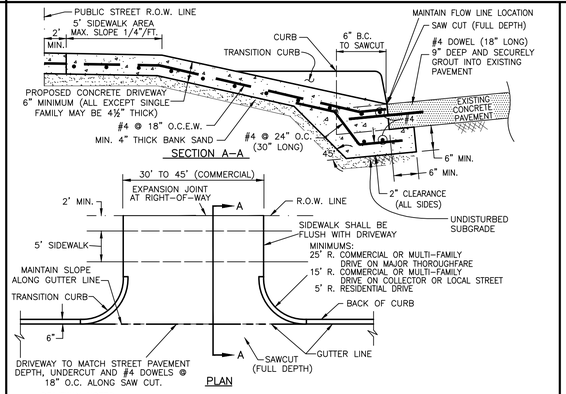

DRIVEWAY NOTES:

1. SAW CUT & BREAKOUT NO MORE THAN 48 HOURS PRIOR TO PROPOSED CONCRETE PLACEMENT.
2. UNACCEPTABLE SUBGRADE SHALL BE OVEREXCAVATED AND REPLACED WITH CONCRETE.
3. EDGE ALL SIDES WITH EDGING TOOL AND BROOM FINISH.
4. PROVIDE BARRICADES AND TRAFFIC WARNING DEVICES DURING CONSTRUCTION.
5. PORTLAND CEMENT CONCRETE CONTAIN A MINIMUM 5½ SACKS PER CUBIC YARD (3500 P.S.I. AT 28 DAYS).
6. REINFORCING SHALL BE ASTM A–615 GRADE WITH 10" MINIMUM OVERLAP AT JOINTS.
7. COMPACT SUBGRADE TO 95% OF STANDARD PROCTOR DENSITY (+/– 2% OF OPTIMUM MOISTURE).
8. EXTEND EXPANSION JOINT FROM STREET TO THE RIGHT–OF–WAY.

6. CONCRETE DRIVEWAY

4. TRAFFIC MARKINGS

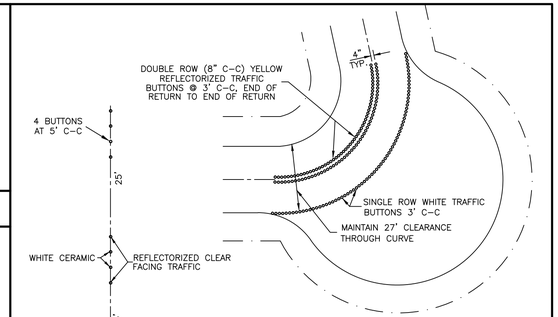

TYPICAL BUTTON DETAIL
FOR KNUCKLE CUL–DE–SAC

NOTES:

THERMOPLASTIC STRIPES MAY BE SUBSTITUTED INSIDE THE CITY, WITH SPECIFIC APPROVAL. (90–MIL CENTERLINE & 60–MIL EDGE LINE)

LANE SEPARATION BUTTON DETAIL FOR SAME TRAFFIC DIRECTION
(WHITE BUTTONS)
REQUIRED ON ALL BOULEVARDS

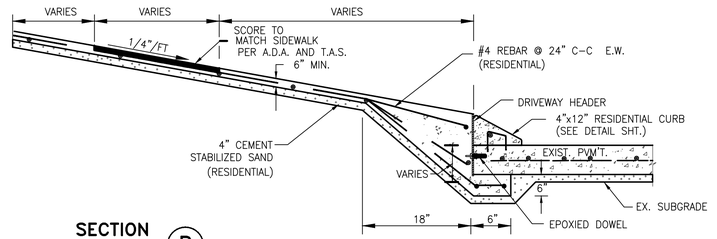

SECTION B

7. 4"X12" CONCRETE CURB DRIVEWAY PLAN

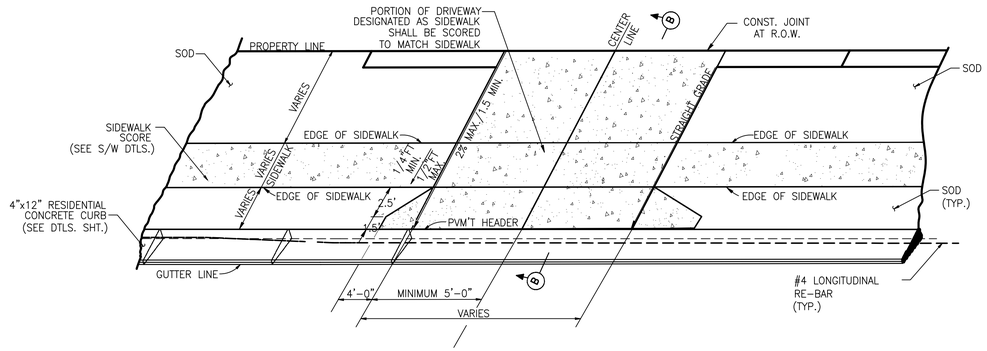

NO.	DATE	REVISIONS	APP.

CITY OF RICHMOND
STANDARD CONSTRUCTION DETAILS

PAVING–2

SCALE		DESIGNED BY: LLT
HORIZONTAL	1" = NTS	DRAWN BY: TWB
VERTICAL	1" = NTS	CHECKED BY: CBA
		DATE: 3/22/19
		JOB NO:
		DWG. NO: R–10–19
		Sheet:

File Name=N:\Details\Richmond\2019 COR STANDARDS\R-10-19 – Pave.dwg
Layout Tab=R-10-19 Pave
Saved date=Tuesday, March 19, 2019 9:40:18 AM
Plot date=Tuesday, March 19, 2019 9:48:15 AM

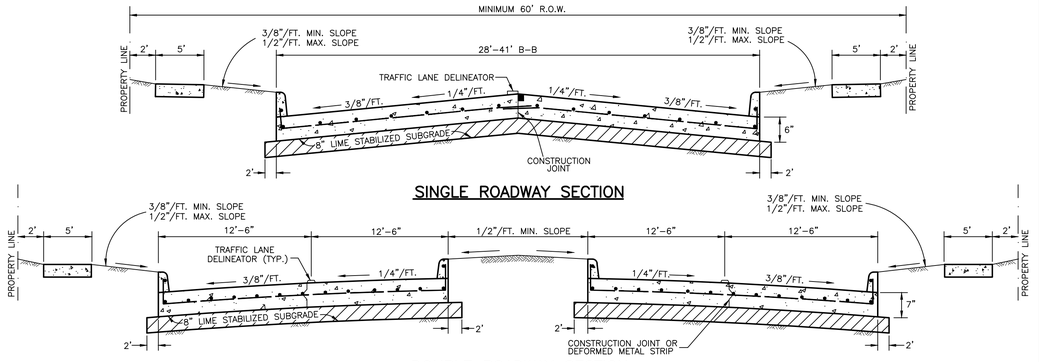

NOTE:

1. ALL REINFORCING STEEL SHALL CONFORM TO ASTM-615, CURRENT REVISION, GRADE 60. MINIMUM LAP AT ALL SPLICES SHALL BE FIFTEEN INCHES (15"). No. 4 BARS @ 18" O.C.E.W.
2. CONCRETE SHALL HAVE A 3500 P.S.I. COMPRESSIVE STRENGTH AT 28 DAYS AND A MINIMUM 550 P.S.I. FLEXURAL STRENGTH AT 7 DAYS, AND SHALL CONTAIN A MINIMUM OF FIVE AND ONE HALF (5½) SACKS OF CEMENT PER CUBIC YARD OF CONCRETE.
3. EXPANSION JOINTS SHALL BE SPACED AT 60'-0" O.C. (MAXIMUM) WITH LATERAL, SAWED JOINTS AT 20'-0" O.C. (MAXIMUM). ALL JOINTS SHALL BE SEALED. THE LOCATION OF CONSTRUCTION JOINTS AND DEFORMED METAL STRIPS MAY BE VARIED WITH CITY APPROVAL.
4. 8" LIME STABILIZED SUBGRADE SHALL BE A MINIMUM OF 8% LIME, UNLESS SPECIFICALLY APPROVED BY THE CITY.
5. THE SLOPE BETWEEN PAVEMENT AND THE SIDEWALK/PROPERTY LINE MAY BE INCREASED, WITH APPROVAL FROM THE CITY.

1. STANDARD CONCRETE CURB AND GUTTER STREET CROSS-SECTIONS

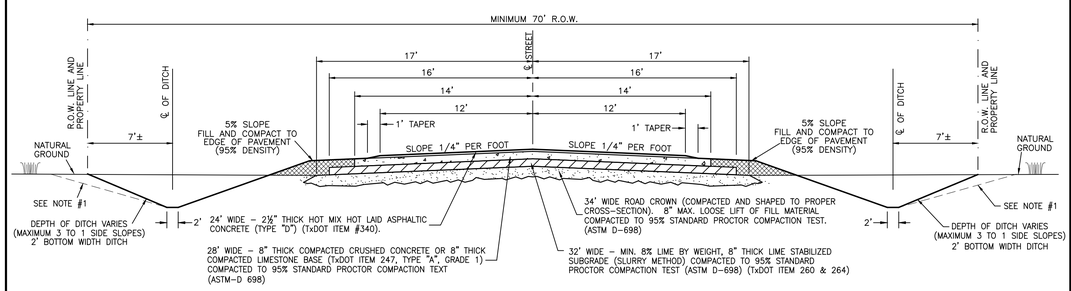

NOTES:

1. PROVIDE DRAINAGE EASEMENT ADJOINING THE R.O.W. AND EXTEND BACK SLOPE OF DITCH WITHIN THE EASEMENT AS NECESSARY TO MAINTAIN 3 TO 1 SIDE SLOPE (TYP.).
2. PAVING MARKINGS REQUIRED AS PER CITY OF RICHMOND (IN CITY) OR FORT BEND COUNTY SPECIFICATIONS.

2. STANDARD CONCRETE PAVEMENT WITH OPEN DITCH CROSS-SECTION

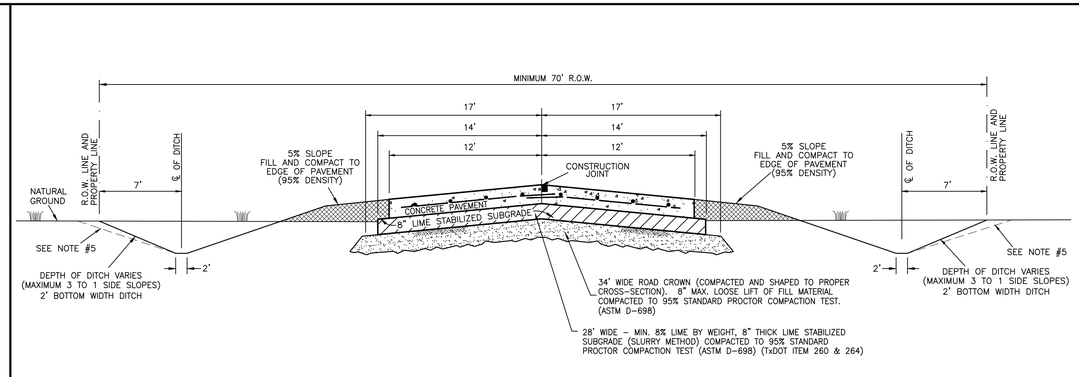

NOTE:

1. ALL REINFORCING STEEL SHALL CONFORM TO ASTM-615, CURRENT REVISION, GRADE 60. MINIMUM LAP AT ALL SPLICES SHALL BE FIFTEEN INCHES (15"). No. 4 BARS @ 18" O.C.E.W.
2. CONCRETE SHALL HAVE A 3500 P.S.I. COMPRESSIVE STRENGTH AT 28 DAYS AND A MINIMUM 550 P.S.I. FLEXURAL STRENGTH AT 7 DAYS, AND SHALL CONTAIN A MINIMUM OF FIVE AND ONE HALF (5½) SACKS OF CEMENT PER CUBIC YARD OF CONCRETE.
3. EXPANSION JOINTS SHALL BE SPACED AT 60'-0" O.C. (MAXIMUM) WITH LATERAL, SAWED JOINTS AT 20'-0" O.C. (MAXIMUM). ALL JOINTS SHALL BE SEALED. THE LOCATION OF CONSTRUCTION JOINTS AND DEFORMED METAL STRIPS MAY BE VARIED WITH CITY APPROVAL.
4. 8" LIME STABILIZED SUBGRADE SHALL BE A MINIMUM OF 8% LIME, UNLESS SPECIFICALLY APPROVED BY THE CITY.
5. PROVIDE DRAINAGE EASEMENT ADJOINING THE R.O.W. AND EXTEND BACK SLOPE OF DITCH WITHIN THE EASEMENT AS NECESSARY TO MAINTAIN 3 TO 1 SIDE SLOPE (TYP.).

3. STANDARD ASPHALT PAVEMENT WITH OPEN DITCH CROSS-SECTION

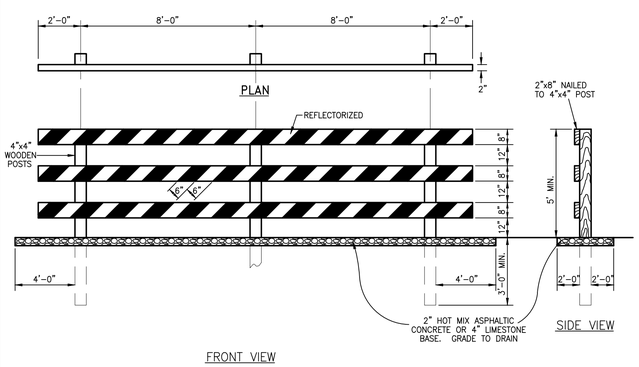

NOTES:

BARRICADES SHALL BE CONSTRUCTED OF CLEAN SOUND LUMBER CUT TO THE NOMINAL DIMENSION SHOWN ON THESE DETAILS. BARRICADES SHALL BE OF FIRST CLASS WORKMANSHIP. ALL SURFACES ABOVE GROUND SHALL BE PAINTED WITH PRIME COAT AND TWO COATS OF AN APPROVED WHITE WHITE PAINT TO OBTAIN THOROUGH COVERAGE AND PROVIDE A UNIFORM WHITE COLOR. BARRICADE STRIPES SHALL SLOPE DOWNWARD AT AN ANGLE OF 45 DEGREES IN THE DIRECTION OF TRAFFIC. PERMANENT BARRICADES SHALL HAVE RED AND WHITE STRIPING. TEMPORARY CONSTRUCTION BARRICADES SHALL HAVE ORANGE AND WHITE STRIPING. BARRICADES CONSTRUCTED OUTSIDE OF THE CITY LIMITS SHALL COMPLY WITH FORT BEND COUNTY REQUIREMENTS.

SIGNS FOR BARRICADES SHALL BE MADE FROM WOOD, HARDBOARD OR METAL CONFORMING WITH THESE REQUIREMENTS:

1. METAL - SIGN PLATES SHALL CONSIST OF STEEL, OR ALUMINUM ALLOY, OR PLASTIC TYPE OF SUFFICIENT THICKNESS TO RETAIN RIGIDITY UNDER NORMAL CONDITIONS.
2. WOOD - SIGN STOCK SHALL BE 2" STOCK B & B GRADE KILN-DRIED LUMBER, OR EQUAL, OR WATERPROOF RESIN-BONDED EXTERIOR GRADE PLYWOOD, DOUGLAS FIR PLYWOOD ASSOCIATION OR EQUAL. ALL WOODEN SIGNS CONSTRUCTED OF TWO OR MORE BOARDS SHALL HAVE A 1"x6" CLEAT FASTENED TO THE BACK OF THE SIGN AT EACH END AND EXTENDING THE FULL DEPTH OF THE SIGN. IN ADDITION TO CLEATS, THE BOARDS SHALL BE FASTENED TOGETHER WITH 1/2" CORRUGATED FASTENERS SPACED AT NOT MORE THAN 12" CENTERS DRIVEN FROM THE BACK OF THE SIGN. BARRICADE TYPE III SHALL BE TREATED WITH 8 LB. PENTACHLOROPHENOL WOOD PRESERVATIVE AND PAINTED WITH A PRIME COAT CONSISTING OF SPAR VARNISH VEHICLE ALUMINUM PAINT, FOLLOWED WITH TWO COAT APPROVED EXTERIOR PAINT. ALL WOOD PRESERVATIVES SHALL BE OF A TYPE WHICH PROHIBIT THE BLEEDING OF PRESERVATIVE.
3. HARDBOARD - SIGN STOCK SHALL BE TEMPERED DUOLUX, 3/8" NOMINAL THICKNESS, LAMINATED WITH WATERPROOF (ENCASE IN GLUE, OR EQUIVALENT).

REFLECTORIZATION SHALL CONSIST OF HIGH INTENSITY PRISMATIC REFLECTIVE SHEETING OR AS REQUIRED BY FORT BEND COUNTY (OUTSIDE OF THE CITY).

ALL BARRICADES EXTENDING ACROSS MOVING LANES SHALL BE SUPPLEMENTED BY LIGHTS PLACED SO AS NOT TO INTERFERE WITH THE VISIBILITY OF REFLECTOR BUTTONS OR REFLECTORIZED SURFACES. THESE LIGHTS SHALL BE MAINTAINED IN CONTINUOUS OPERATION FROM SUNSET TO SUNRISE AND SHALL BE OF THE FLASHING ELECTRIC OR BUTANE TYPE, WITH THE RATE OF FLASHING BETWEEN 70 AND 120 FLASHES PER MINUTE. FLASHING ELECTRIC LIGHTS SHALL NOT BE CONNECTED IN SERIES. ALL LIGHTS SHALL BE OF THE COLOR YELLOW.

4. TRAFFIC SIGNAGE

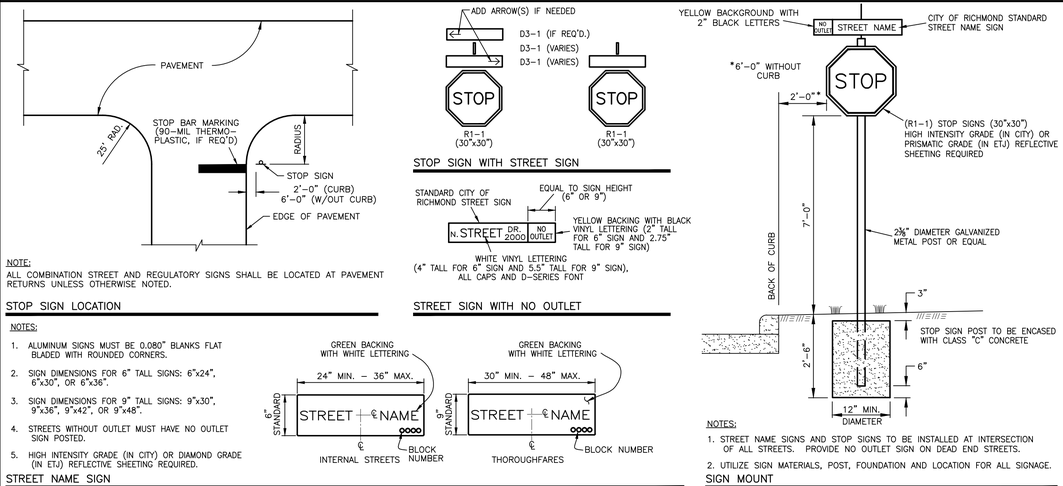

NOTES:

1. ALUMINUM SIGNS MUST BE 0.080" BLANKS FLAT BLADED WITH ROUNDED CORNERS.
2. SIGN DIMENSIONS FOR 6" TALL SIGNS: 6"x24", 6"x30", OR 6"x36".
3. SIGN DIMENSIONS FOR 9" TALL SIGNS: 9"x30", 9"x36", 9"x42", OR 9"x48".
4. STREETS WITHOUT OUTLET MUST HAVE NO OUTLET SIGN POSTED.
5. HIGH INTENSITY GRADE (IN CITY) OR DIAMOND GRADE (IN ETJ) REFLECTIVE SHEETING REQUIRED.

STREET NAME SIGN

NOTES:

1. STREET NAME SIGNS AND STOP SIGNS TO BE INSTALLED AT INTERSECTION OF ALL STREETS. PROVIDE NO OUTLET SIGN ON DEAD END STREETS.
2. UTILIZE SIGN MATERIALS, POST, FOUNDATION AND LOCATION FOR ALL SIGNAGE.

SIGN MOUNT

5. TYPE 'III' BARRICADE

NO.	DATE	REVISIONS	APP.

CITY OF RICHMOND
STANDARD CONSTRUCTION DETAILS

PAVING-3

SCALE		DESIGNED BY:	LLT
HORIZONTAL	1" = NTS	DRAWN BY:	TWB
VERTICAL	1" = NTS	CHECKED BY:	CBA
		DATE:	3/22/19
		JOB NO:	
		DWG. NO:	

R-11-19

Sheet:

File Name=W:\Data\04richmond\2019 COR STANDARDS\R-11-19 - Pave.dwg
Layout Tab=R-11-19-Pave
Save date=Tuesday, March 19, 2019 9:40:45 AM
Plot date=Tuesday, March 19, 2019 9:48:16 AM

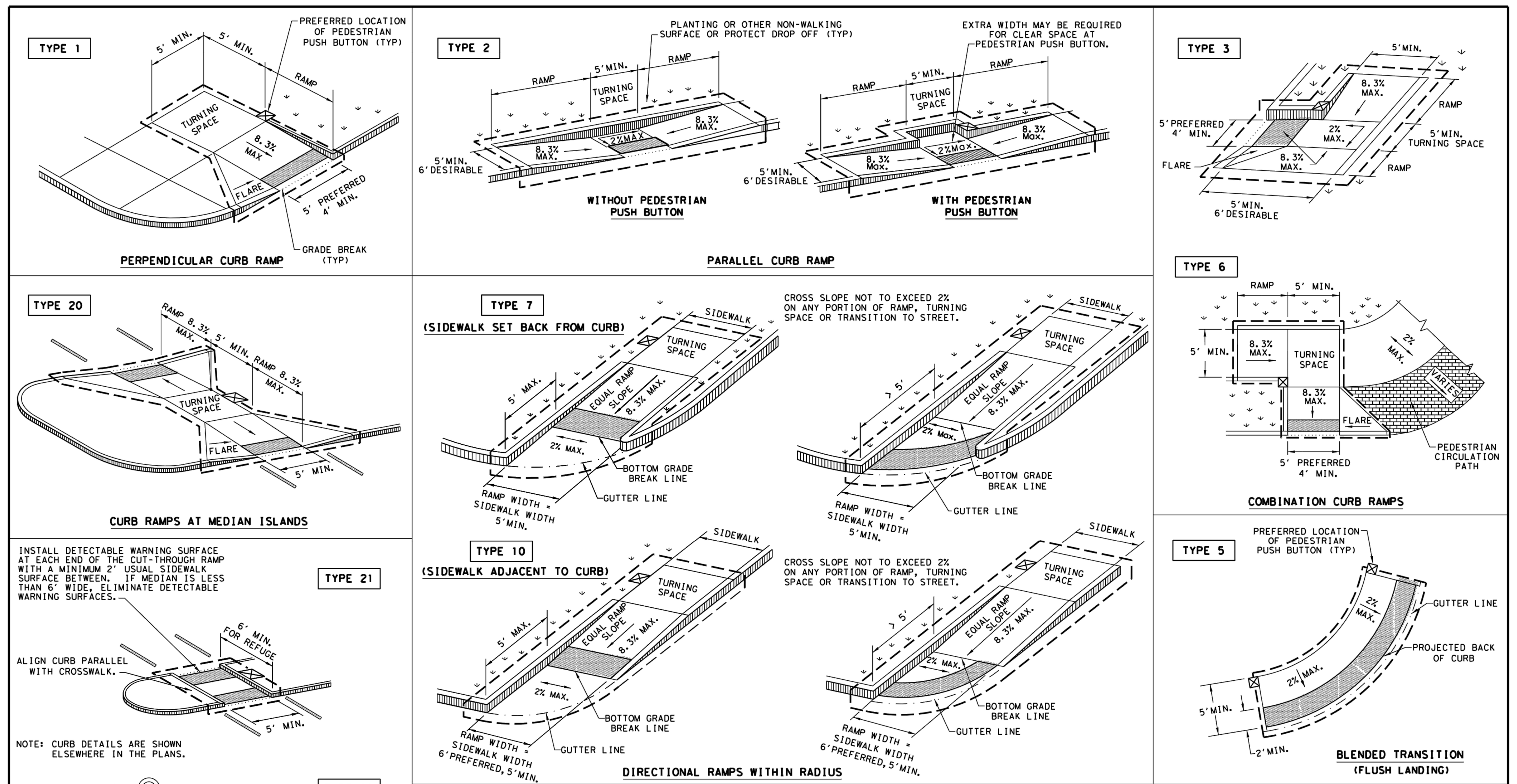

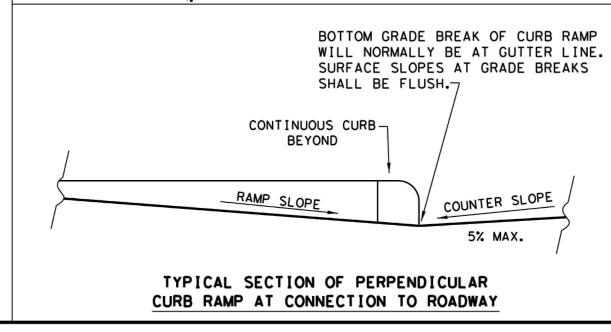

NOTES / LEGEND:

SEE GENERAL NOTES ON SHEET 2 OF 4 FOR MORE INFORMATION.

DENOTES PLANTING OR NON-WALKING SURFACE NOT PART OF PEDESTRIAN CIRCULATION PATH.	GUTTER LINE
DETECTABLE WARNING SURFACE	GRADE BREAK
DENOTES PREFERRED LOCATION OF PEDESTRIAN PUSH BUTTON IF APPLICABLE.	RAMP LIMITS OF PAYMENT

SHEET 1 OF 4

Texas Department of Transportation — Design Division Standard

PEDESTRIAN FACILITIES CURB RAMPS

PED-18

FILE: ped18 | DN: TxDOT | DW: VP | CK: KM | CK: PK & JG
© TxDOT: MARCH, 2002 | CONT | SECT | JOB | HIGHWAY
REVISIONS: REVISED 08, 2005; REVISED 06, 2012; REVISED 01, 2018 | DIST | COUNTY | SHEET NO.

GENERAL NOTES

CURB RAMPS

1. Install a curb ramp or blended transition at each pedestrian street crossing.
2. All slopes shown are maximum allowable. Cross slopes of 1.5% and lesser running should be used. Adjust curb ramp length or grade of approach sidewalks as directed.
3. Maximum allowable cross slope on sidewalk and curb ramp surfaces is 2%.
4. The minimum sidewalk width is 5'. Where the sidewalk is adjacent to the back of curb, a 6' sidewalk width is desirable. Where a 5' sidewalk cannot be provided due to site constraints, sidewalk width may be reduced to 4' for short distances. 5'x 5' passing areas at intervals not to exceed 200' are required.
5. Turning Spaces shall be 5'x 5' minimum. Cross slope shall be maximum 2%.
6. Clear space at the bottom of curb ramps shall be a minimum of 4'x 4' wholly contained within the crosswalk and wholly outside the parallel vehicular travel path.
7. Provide flared sides where the pedestrian circulation path crosses the curb ramp. Flared sides shall be sloped at 10% maximum, measured parallel to the curb. Returned curbs may be used only where pedestrians would not normally walk across the ramp, either because the adjacent surface is planted, substantially obstructed, or otherwise protected.
8. Additional information on curb ramp location, design, light reflective value and texture may be found in the latest draft of the Proposed Guidelines for Pedestrian Facilities in the Public Right of Way (PROWAG) as published by the U.S. Architectural and Transportation Barriers Compliance Board (Access Board).
9. To serve as a pedestrian refuge area, the median should be a minimum of 6' wide, measured from back of curbs. Medians should be designed to provide accessible passage over or through them.
10. Small channelization islands, which do not provide a minimum 5'x 5' landing at the top of curb ramps, shall be cut through level with the surface of the street.
11. Crosswalk dimensions, crosswalk markings and stop bar locations shall be as shown elsewhere in the plans. At intersections where crosswalk markings are not required, curb ramps shall align with theoretical crosswalks unless otherwise directed.
12. Provide curb ramps to connect the pedestrian access route at each pedestrian street crossing. Handrails are not required on curb ramps.
13. Curb ramps and landings shall be constructed and paid for in accordance with Item 531 "Sidewalks".
14. Place concrete at a minimum depth of 5" for ramps, flares and landings, unless otherwise directed.
15. Furnish and install No. 3 reinforcing steel bars at 18" o.c. both ways, unless otherwise directed.
16. Provide a smooth transition where the curb ramps connect to the street.
17. Curbs shown on sheet 1 within the limits of payment are considered part of the curb ramp for payment, whether it is concrete curb, gutter, or combined curb and gutter.
18. Existing features that comply with applicalble standards may remain in place unless otherwise shown on the plans.

DETECTABLE WARNING MATERIAL

19. Curb ramps must contain a detectable warning surface that consists of raised truncated domes complying with PROWAG. The surface must contrast visually with adjoining surfaces, including side flares. Furnish and install an approved cast-in-place dark brown or dark red detectable warning surface material adjacent to uncolored concrete, unless specified elsewhere in the plans.
20. Detectable Warning Materials must meet TxDOT Departmental Materials Specification DMS 4350 and be listed on the Material Producer List. Install products in accordance with manufacturer's specifications.
21. Detectable warning surfaces must be firm, stable and slip resistant.
22. Detectable warning surfaces shall be a minimum of 24 inches in depth in the direction of pedestrian travel, and extend the full width of the curb ramp or landing where the pedestrian access route enters the street.
23. Detectable warning surfaces shall be located so that the edge nearest the curb line is at the back of curb and neither end of that edge is greater than 5 feet from the back of curb. Detectable warning surfaces may be curved along the corner radius.
24. Shaded areas on Sheet 1 of 4 indicate the approximate location for the detectable warning surface for each curb ramp type.

DETECTABLE WARNING PAVERS (IF USED)

25. Furnish detectable warning paver units meeting all requirements of ASTM C-936, C-33. Lay in a two by two unit basket weave pattern or as directed.
26. Lay full-size units first followed by closure units consisting of at least 25 percent (25%) of a full unit. Cut detectable warning paver units using a power saw.

SIDEWALKS

27. Provide clear ground space at operable parts, including pedestrian push buttons. Operable parts shall be placed within unobstructed reach range specified in PROWAG section R406.
28. Place traffic signal or illumination poles, ground boxes, controller boxes, signs, drainage facilities and other items so as not to obstruct the pedestrian access route or clear ground space.
29. Street grades and cross slopes shall be as shown elsewhere in the plans.
30. Changes in level greater than 1/4 inch are not permitted.
31. The least possible grade should be used to maximize accessibility. The running slope of sidewalks and crosswalks within the public right of way may follow the grade of the parallel roadway. Where a continuous grade greater than five percent (5%) must be provided, handrails may be desirable to improve accessibility. Handrails may also be needed to protect pedestrians from potentially hazardous conditions. If provided, handrails shall comply with PROWAG R409.
32. Handrail extensions shall not protrude into the usable landing area or into intersecting pedestrian routes.
33. Driveways and turnouts shall be constructed and paid for in accordance with Item "Intersections, Driveways and Turnouts". Sidewalks shall be constructed and paid for in accordance with Item, "Sidewalks".
34. Sidewalk details are shown elsewhere in the plans.

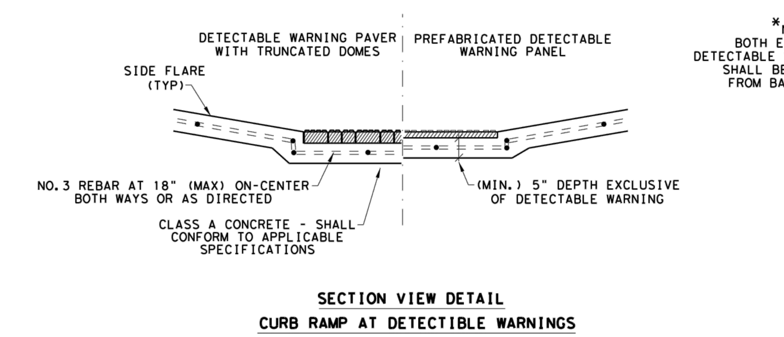

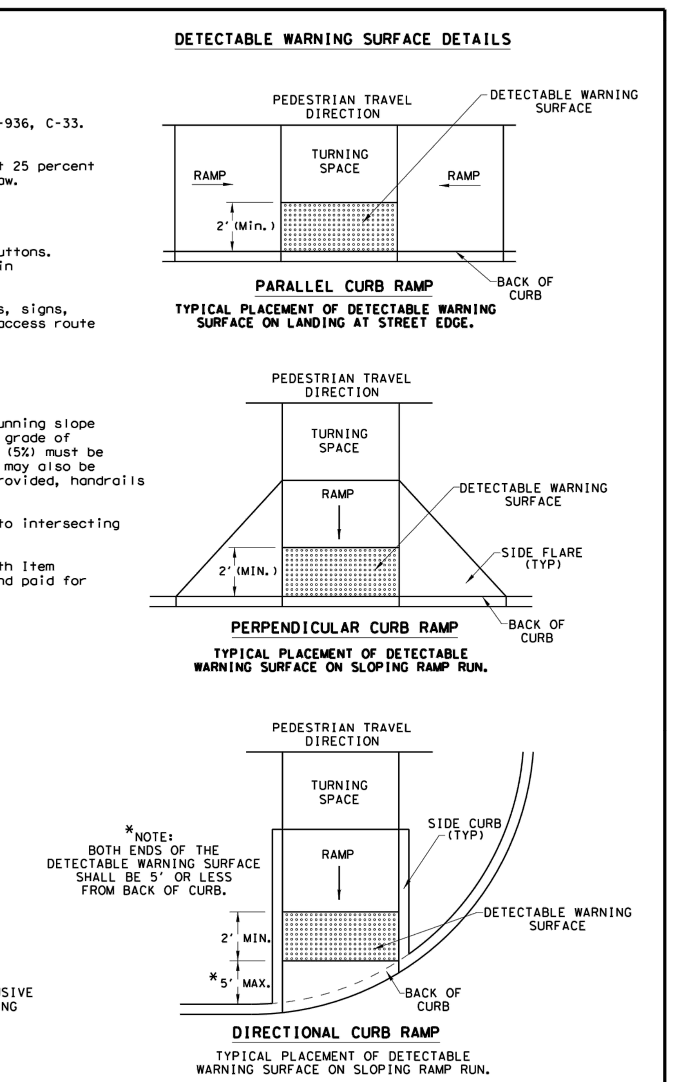

SHEET 2 OF 4

Texas Department of Transportation — Design Division Standard

PEDESTRIAN FACILITIES CURB RAMPS

PED-18

FILE: ped18 | DN: TxDOT | DW: VP | CK: KM | CK: PK & JG
© TxDOT: MARCH, 2002 | CONT | SECT | JOB | HIGHWAY
REVISIONS: REVISED 08, 2005; REVISED 06, 2012; REVISED 01, 2018 | DIST | COUNTY | SHEET NO.

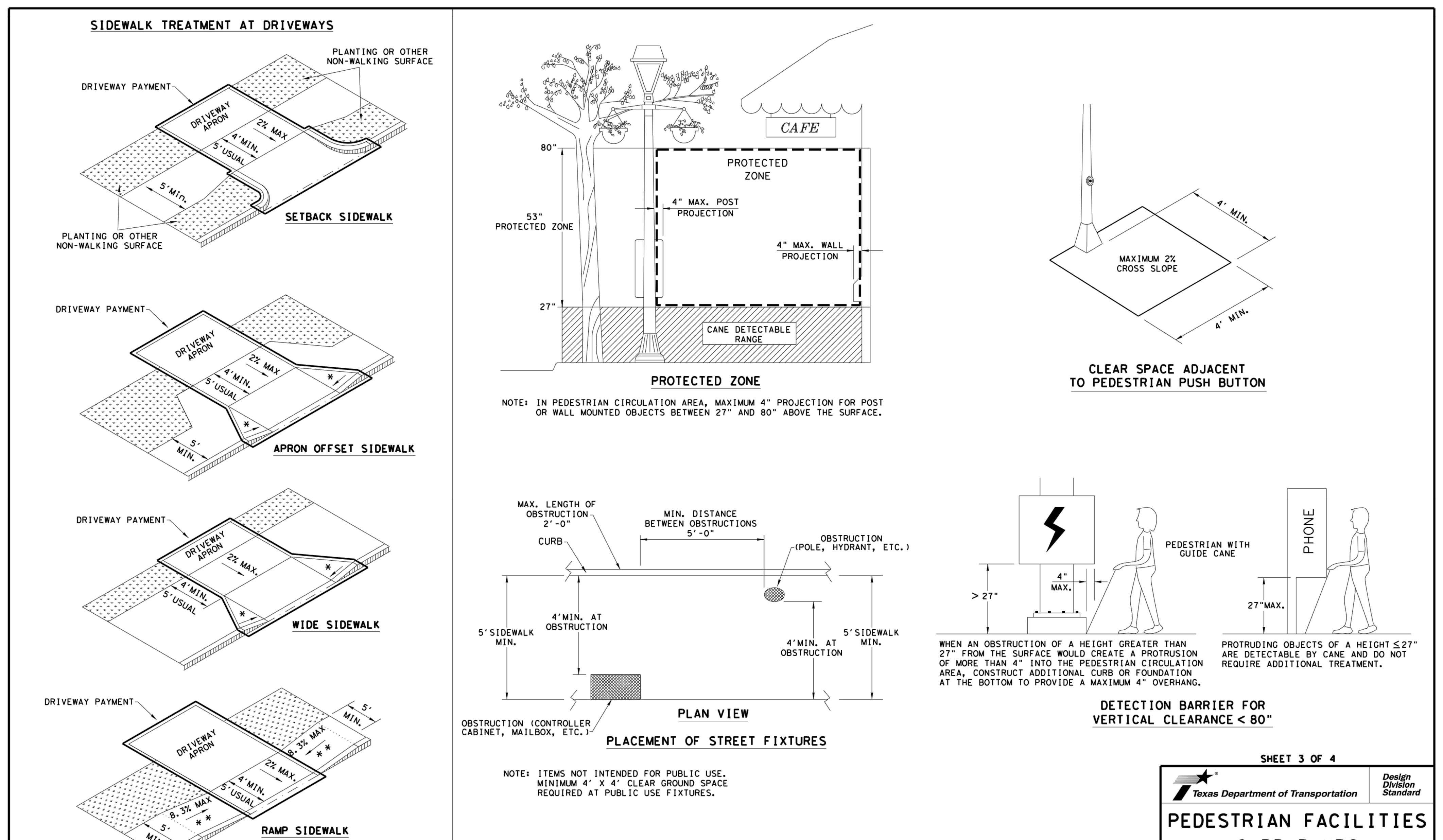

NOTES:

* WHERE DRIVEWAYS CROSS THE PEDESTRIAN ROUTE, SIDES SHALL BE FLARED AT 10% MAX SLOPE.

** IF CURB HEIGHT IS GREATER THAN 6 INCHES, USE GRADE LESS THAN OR EQUAL TO 5%. HANDRAIL AND DETECTABLE WARNING ARE NOT REQUIRED.

SHEET 3 OF 4

Texas Department of Transportation — Design Division Standard

PEDESTRIAN FACILITIES CURB RAMPS

PED-18

FILE: ped18 | DN: TxDOT | DW: VP | CK: KM | CK: PK & JG
© TxDOT: MARCH, 2002 | CONT | SECT | JOB | HIGHWAY
REVISIONS: REVISED 08, 2005; REVISED 06, 2012; REVISED 01, 2018 | DIST | COUNTY | SHEET NO.

TYPICAL CROSSING LAYOUTS
SEE SHEET 1 OF 4 FOR DETAILS AND DIMENSIONS

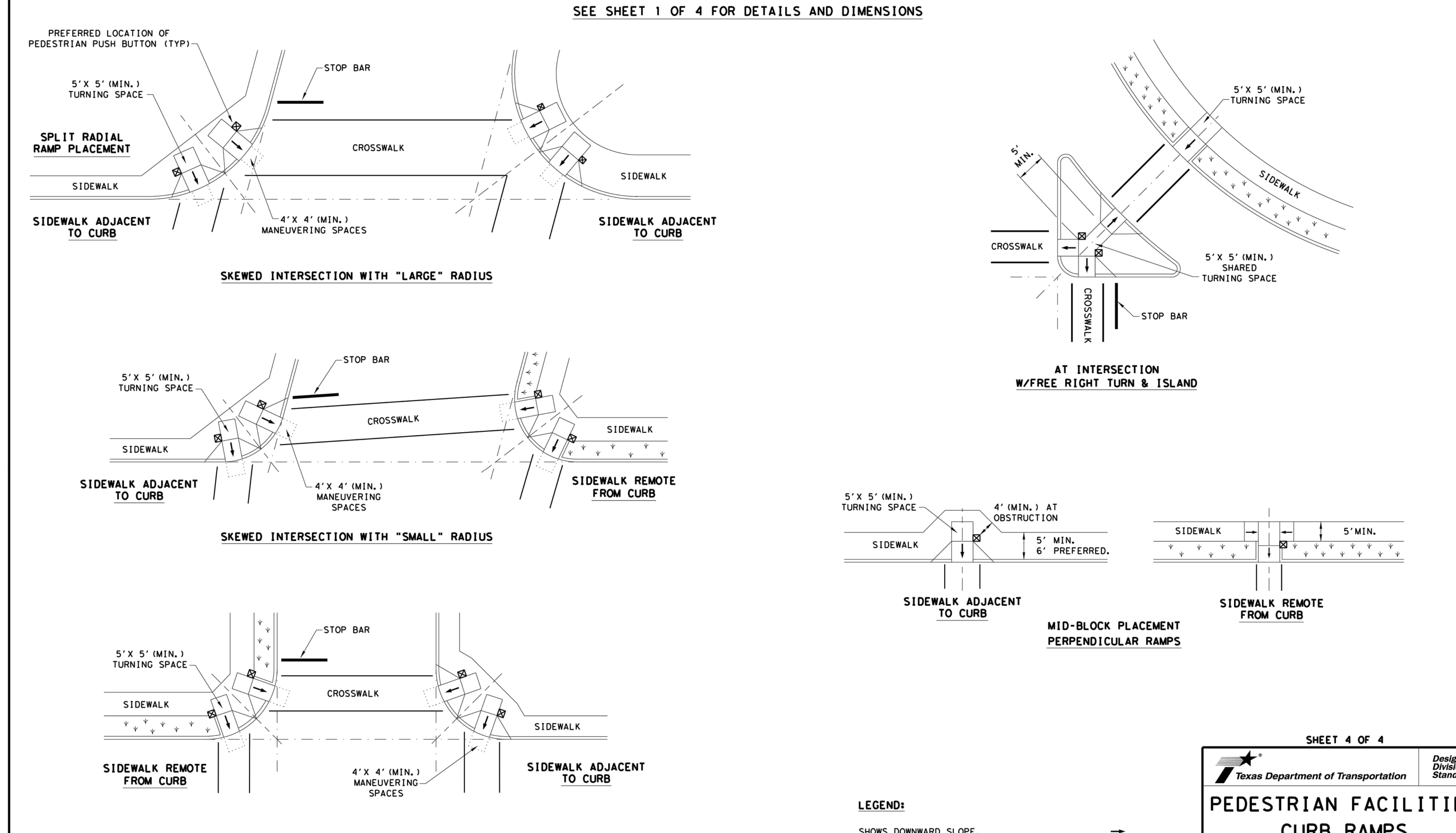

LEGEND:

SHOWS DOWNWARD SLOPE.	→
DENOTES PREFERRED LOCATION OF PEDESTRIAN PUSH BUTTON (IF APPLICABLE).	⊠
DENOTES PLANTING OR NON-WALKING SURFACE NOT PART OF PEDESTRIAN CIRCULATION PATH.	

SHEET 4 OF 4

Texas Department of Transportation — Design Division Standard

PEDESTRIAN FACILITIES CURB RAMPS

PED-18

FILE: ped18 | DN: TxDOT | DW: VP | CK: KM | CK: PK & JG
© TxDOT: MARCH, 2002 | CONT | SECT | JOB | HIGHWAY
REVISIONS: REVISED 08, 2005; REVISED 06, 2012; REVISED 01, 2018 | DIST | COUNTY | SHEET NO.

DISCLAIMER: The use of this standard is governed by the "Texas Engineering Practice Act". No warranty of any kind is made by TxDOT for any purpose whatsoever. TxDOT assumes no responsibility for the conversion of this standard to other formats or for incorrect results or damages resulting from its use.

NO.	DATE	REVISIONS	APP.

CITY OF RICHMOND
STANDARD CONSTRUCTION DETAILS

PAVING–4

SCALE		
HORIZONTAL	1" = NTS	DESIGNED BY: LLT
VERTICAL	1" = NTS	DRAWN BY: TWB
		CHECKED BY: CBA
		DATE: 3/22/19
		JOB NO:
		DWG. NO:

R–12–19

Sheet:

File Name:W:\Details\Richmond\2019 COR STANDARD\R-12-19 - Pave.dwg
Layout Tab:R-12-16-Pave
Save date:Tuesday, March 19, 2019 9:41:21 AM Plot date:Tuesday, March 19, 2019 9:48:19 AM